Map Lot R12-013 Account 395 Location 1838 HALLOWELL ROAD Card 1 Of 1 11/24/2020

CUMMINGS, DAVID
CUMMINGS ROBIN
116 CHESLEY DRIVE
LITCHFIELD ME 04350

B2734P285

Property Data

Neighborhood **82 Hallowell Road**

Tree Growth Year **0**

X Coordinate **0**

Y Coordinate **0**

Zone/Land Use **11 Residential**

Secondary Zone

Topography **2 Rolling**

1.Level	4.Below St	7.Res Protec
2.Rolling	5.Low	8.
3.Above St	6.Swampy	9.

Utilities **4 Drilled Well** **6 Septic System**

1.Public	4.Dr Well	7.Cesspool
2.Water	5.Dug Well	8.Lake/Pond
3.Sewer	6.Septic	9.None

Street **9 None**

1.Paved	4.Proposed	7.
2.Semi Imp	5.R/O/W	8.
3.Gravel	6.	9.None

0

0

Sale Data

Sale Date

Price

Sale Type

1.Land	4.MFG UNIT	7.
2.L & B	5.Other	8.
3.Building	6.	9.

Financing

1.Convent	4.Seller	7.
2.FHA/VA	5.Private	8.
3.Assumed	6.Cash	9.Unknown

Validity

1.Valid	4.Split	7.Renovate
2.Related	5.Partial	8.Other
3.Distress	6.Exempt	9.

Verified

1.Buyer	4.Agent	7.Family
2.Seller	5.Pub Rec	8.Other
3.Lender	6.MLS	9.

Assessment Record

Year	Land	Buildings	Exempt	Total
2007	58,200	153,855	13,000	199,055
2008	85,875	135,421	12,350	208,946
2009	86,806	148,391	9,500	225,697
2010	87,060	152,867	10,000	229,927
2011	87,060	175,652	10,000	252,712
2012	87,060	140,312	10,000	217,372
2013	87,090	139,846	10,000	216,936
2014	49,386	80,459	0	129,845
2015	49,482	79,534	0	129,016
2016	67,530	79,534	0	147,064
2017	67,740	78,609	0	146,349
2018	67,620	78,609	0	146,229
2019	73,400	111,500	0	184,900
2020	73,400	111,500	0	184,900

Land Data

Front Foot	Type	Effective Frontage	Effective Depth	Influence Factor	Influence Code
11.1-100				%	
12.101-200				%	
13.201+				%	
14.				%	
15.				%	
				%	
				%	
Square Foot		**Square Feet**			
16.Regular Lot				%	
17.Secondary Lot				%	
18.Excess Land				%	
19.Condominium				%	
20.Miscellaneous				%	
				%	
				%	
Fract. Acre		**Acreage/Sites**			
21.Houselot (Frac	24	1.00		100 %	0
22.Baselot(Fract)	26	5.00		100 %	0
23.	27	10.00		100 %	0
Acres	28	3.00		100 %	0
24.Houselot	40	4.00		100 %	0
25.Baselot	38	10.00		100 %	0
26.Rear 1	44	1.00		100 %	0
27.Rear 2					
28.Rear 3					
29.Rear 4					

Total Acreage 33.00

Influence Codes

1.Unimproved
2.Excess Frtg
3.Topography
4.Size/Shape
5.Access
6.Restriction
7.Right of Way
8.View/Environ
9.Fract Share

Acres

30.Frontage 1
31.Frontage 2
32.Tillable
33.Tillable
34.Softwood F&O
35.Mixed Wood F&O
36.Hardwood F&O
37.Softwood TG
38.Mixed Wood TG
39.Hardwood TG
40.Wasteland
41.Gravel Pit
42.Mobile Home Si
43.Camp Site
44.Lot Improvemen
45.Access Right
46.Golf Course

Inspection Witnessed By:

X Date

No./Date	Description	Date Insp.

Notes:

"16 Tg Refile and also adjust pasture acres to regular land this lot is not in farmland.

Litchfield

Litchfield

Map Lot R12-013 | Account 395 | Location 1838 HALLOWELL ROAD | Card 1 Of 1 | 11/24/2020

Building Style	**1 Conventional**	
0.Uncoded	4.Cape	8.Log
1.Conv.	5.Garrison	9.Other
2.Ranch	6.Split	10.Tri-Lev
3.R Ranch	7.Contemp	11.Earth O
Dwelling Units	**1**	
Other Units	**0**	
Stories	**4 One & 1/2 Story**	
1.1	4.1.5	7.1.25
2.2	5.1.75	8.3.5
3.3	6.2.5	9.4
Exterior Walls	**2 Vinyl**	
0.Uncoded	4.Asbestos	8.Concrete
1.Wd Clapb	5.Stucco	9.Other
2.Vinyl	6.Brick	10.Wd shin
3.Compos.	7.Stone	11.T1-11
Roof Surface	**1 Asphalt Shingles**	
1.Asphalt	4.Composit	7.Rolled R
2.Slate	5.Wood	8.
3.Metal	6.Other	9.
SF Masonry Trim	**0**	
OPEN-3-CUSTOM	**0**	
OPEN-4-CUSTOM	**0**	
Year Built	**1995**	
Year Remodeled	**0**	
Foundation	**1 Concrete**	
1.Concrete	4.Wood	7.
2.C Block	5.Slab	8.
3.Br/Stone	6.Piers	9.
Basement	**4 Full Basement**	
1.1/4 Bmt	4.Full Bmt	7.
2.1/2 Bmt	5.Crawl Sp	8.
3.3/4 Bmt	6.	9.None
Bsmt Gar # Cars	**0**	
Wet Basement	**1 Dry Basement**	
1.Dry	4.Dirt Flr	7.
2.Damp	5.	8.
3.Wet	6.	9.

SF Bsmt Living	**0**	
Fin Bsmt Grade	**0 0**	
OPEN-5-CUSTOMIZE	**0**	
Heat Type	**100%**	**1 Hot Water BB**
0.Uncoded	4.Steam	8.Fl/Wall
1.HWBB	5.FWA	9.No Heat
2.HWCI	6.GravWA	10.Radiant
3.H Pump	7.Electric	11.Radiant
Cool Type	**0%**	**9 None**
1.Refrig	4.W&C Air	7.RadHW
2.Evapor	5.Monitor-	8.
3.H Pump	6.Monitor-	9.None
Kitchen Style	**2 Typical**	
1.Modern	4.Obsolete	7.
2.Typical	5.	8.
3.Old Type	6.	9.None
Bath(s) Style	**2 Typical Bath(s)**	
1.Modern	4.Obsolete	7.
2.Typical	5.	8.
3.Old Type	6.	9.None
# Rooms	**6**	
# Bedrooms	**3**	
# Full Baths	**1**	
# Half Baths	**1**	
# Addn Fixtures	**0**	
# Fireplaces	**0**	

TRIO Software
A Division of Harris Computer Systems

Layout	**1 Typical**	
1.Typical	4.	7.
2.Inadeq	5.	8.
3.	6.	9.
Attic	**9 None**	
1.1/4 Fin	4.Full Fin	7.
2.1/2 Fin	5.Fl/Stair	8.
3.3/4 Fin	6.	9.None
Insulation	**1 Full**	
1.Full	4.Minimal	7.
2.Heavy	5.Partial	8.
3.Capped	6.	9.None
Unfinished %	**0%**	
Grade & Factor	**3 Average 95%**	
1.E Grade	4.B Grade	7.AAA Grad
2.D Grade	5.A Grade	8.M&S
3.C Grade	6.AA Grade	9.Same
SQFT (Footprint)	**768**	
Condition	**4 Average**	
1.Poor	4.Avg	7.V G
2.Fair	5.Avg+	8.Exc
3.Avg-	6.Good	9.Same
Phys. % Good	**0%**	
Funct. % Good	**95%**	
Functional Code	**1 Incomplete**	
1.Incomp	4.Delap	7.No Power
2.O-Built	5.Bsmt	8.LongTerm
3.Damage	6.Common	9.None
Econ. % Good	**100%**	
Economic Code	**None**	
0.None	3.No Power	9.None
1.Location	4.Generate	8.
2.Encroach	5.Multi-Fa	9.
Entrance Code	**1 Interior Inspect**	
1.Interior	4.Vacant	7.
2.Refusal	5.Estimate	8.
3.Informed	6.Existing	9.
Information Code	**1 Owner**	
1.Owner	4.Agent	7.Vacant
2.Relative	5.Estimate	8.
3.Tenant	6.Other	9.

Date Inspected 10/17/2018

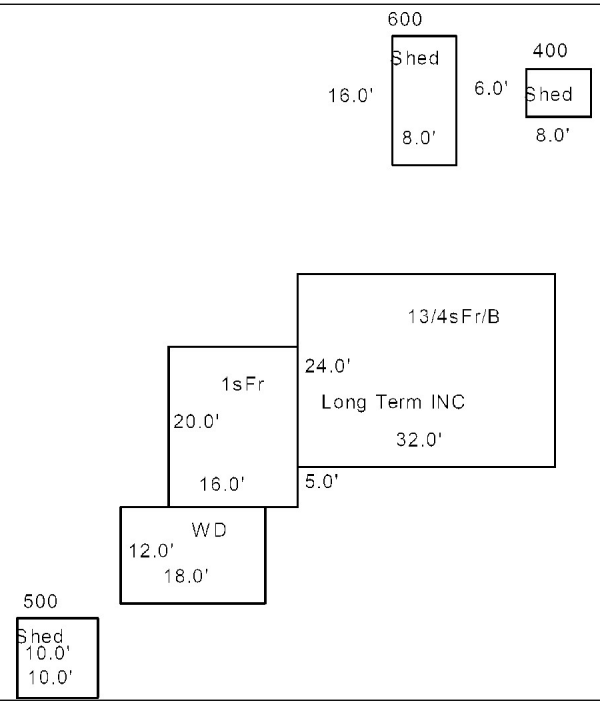

Additions, Outbuildings & Improvements

Type	Year	Units	Grade	Cond	Phys.	Funct.	Sound Value
1 One Story Frame	0	320	0 0	0	0 %	0 %	
68 Wood Deck/s	0	216	0 0	0	0 %	0 %	
24 Frame Shed	0				%	%	500
24 Frame Shed	0				%	%	600
24 Frame Shed	0				%	%	400
					%	%	
					%	%	
					%	%	
					%	%	
					%	%	

1.One Story Fram
2.Two Story Fram
3.Three Story Fr
4.1 & 1/2 Story
5.1 & 3/4 Story
6.2 & 1/2 Story
21.Open Frame Por
22.Encl Frame Por
23.Frame Garage
24.Frame Shed
25.Frame Bay Wind
26.1SFr Overhang
27.Unfin Basement
28.Unfinished Att
29.Finished Attic

Map Lot R12-013A | Account 726 | Location 1455 LEWISTON ROAD | Card 1 Of 1 | 11/24/2020

LIBBY, TIMOTHY R
LIBBY, EMILY A
1455 LEWISTON ROAD
LITCHFIELD ME 04350

B13010P59

Previous Owner
GILBERT, KRISTOFFERSON
GILBERT, STARLA L.
1455 LEWISTON ROAD
LITCHFIELD ME 04350
Sale Date: 8/08/2018

Previous Owner
CROWE, GARY & DARLENE
28 CUMMINGS DRIVE

SIDNEY ME 04330
Sale Date: 6/23/2014

Inspection Witnessed By:

X Date

No./Date	Description	Date Insp.

Notes:
'17 W Starla new hse & LI.
'16 no new hse add garage.

Litchfield

Property Data

Neighborhood	**113 Lewiston Road**
Tree Growth Year	**0**
X Coordinate	**0**
Y Coordinate	**0**
Zone/Land Use	**11 Residential**
Secondary Zone	
Topography	**2 Rolling**

1.Level	4.Below St	7.Res Protec
2.Rolling	5.Low	8.
3.Above St	6.Swampy	9.

Utilities **4 Drilled Well** **6 Septic System**

1.Public	4.Dr Well	7.Cesspool
2.Water	5.Dug Well	8.Lake/Pond
3.Sewer	6.Septic	9.None

Street **1 Paved**

1.Paved	4.Proposed	7.
2.Semi Imp	5.R/O/W	8.
3.Gravel	6.	9.None

0
0

Sale Data

Sale Date	**8/08/2018**
Price	**240,000**
Sale Type	**2 Land & Buildings**

1.Land	4.MFG UNIT	7.
2.L & B	5.Other	8.
3.Building	6.	9.

Financing **9 Unknown**

1.Convent	4.Seller	7.
2.FHA/VA	5.Private	8.
3.Assumed	6.Cash	9.Unknown

Validity **1 Arms Length Sale**

1.Valid	4.Split	7.Renovate
2.Related	5.Partial	8.Other
3.Distress	6.Exempt	9.

Verified **5 Public Record**

1.Buyer	4.Agent	7.Family
2.Seller	5.Pub Rec	8.Other
3.Lender	6.MLS	9.

Assessment Record

Year	Land	Buildings	Exempt	Total
2007	39,600	0	0	39,600
2008	39,600	0	0	39,600
2009	38,000	0	0	38,000
2010	38,000	0	0	38,000
2011	38,000	0	0	38,000
2012	38,000	0	0	38,000
2013	38,000	0	0	38,000
2014	38,000	0	0	38,000
2015	38,000	0	0	38,000
2016	38,000	20,294	0	58,294
2017	50,000	115,749	0	165,749
2018	50,000	114,742	0	164,742
2019	57,000	171,100	0	228,100
2020	57,000	171,100	0	228,100

Land Data

Front Foot	Type	Effective Frontage	Effective Depth	Influence Factor	Influence Code
11.1-100				%	
12.101-200				%	
13.201+				%	
14.				%	
15.				%	
				%	
				%	

Square Foot		Square Feet		
16.Regular Lot			%	
17.Secondary Lot			%	
18.Excess Land			%	
19.Condominium			%	
20.Miscellaneous			%	
			%	
			%	

Fract. Acre	Acreage/Sites			
21.Houselot (Frac	24	1.00	100 %	0
22.Baselot(Fract)	26	4.00	100 %	0
23.	44	1.00	100 %	0
Acres			%	
24.Houselot			%	
25.Baselot			%	
26.Rear 1			%	
27.Rear 2			%	
28.Rear 3				
29.Rear 4				

Total Acreage 5.00

Influence Codes
1.Unimproved
2.Excess Frtg
3.Topography
4.Size/Shape
5.Access
6.Restriction
7.Right of Way
8.View/Environ
9.Fract Share
Acres
30.Frontage 1
31.Frontage 2
32.Tillable
33.Tillable
34.Softwood F&O
35.Mixed Wood F&O
36.Hardwood F&O
37.Softwood TG
38.Mixed Wood TG
39.Hardwood TG
40.Wasteland
41.Gravel Pit
42.Mobile Home Si
43.Camp Site
44.Lot Improvemen
45.Access Right
46.Golf Course

Litchfield

Map Lot R12-013A | Account 726 | Location 1455 LEWISTON ROAD | Card 1 Of 1 | 11/24/2020

Building Style	**0 Uncoded**	
0.Uncoded	4.Cape	8.Log
1.Conv.	5.Garrison	9.Other
2.Ranch	6.Split	10.Tri-Lev
3.R Ranch	7.Contemp	11.Earth O
Dwelling Units	**1**	
Other Units	**0**	
Stories	**1 One Story**	
1.1	4.1.5	7.1.25
2.2	5.1.75	8.3.5
3.3	6.2.5	9.4
Exterior Walls	**2 Vinyl**	
0.Uncoded	4.Asbestos	8.Concrete
1.Wd Clapb	5.Stucco	9.Other
2.Vinyl	6.Brick	10.Wd shin
3.Compos.	7.Stone	11.T1-11
Roof Surface	**1 Asphalt Shingles**	
1.Asphalt	4.Composit	7.Rolled R
2.Slate	5.Wood	8.
3.Metal	6.Other	9.
SF Masonry Trim	**0**	
OPEN-3-CUSTOM	**0**	
OPEN-4-CUSTOM	**0**	
Year Built	**2016**	
Year Remodeled	**0**	
Foundation	**1 Concrete**	
1.Concrete	4.Wood	7.
2.C Block	5.Slab	8.
3.Br/Stone	6.Piers	9.
Basement	**4 Full Basement**	
1.1/4 Bmt	4.Full Bmt	7.
2.1/2 Bmt	5.Crawl Sp	8.
3.3/4 Bmt	6.	9.None
Bsmt Gar # Cars	**0**	
Wet Basement	**1 Dry Basement**	
1.Dry	4.Dirt Flr	7.
2.Damp	5.	8.
3.Wet	6.	9.

SF Bsmt Living	**0**	
Fin Bsmt Grade	**0 0**	
OPEN-5-CUSTOMIZE	**0**	
Heat Type	**100% 5 Forced Warm Air**	
0.Uncoded	4.Steam	8.Fl/Wall
1.HWBB	5.FWA	9.No Heat
2.HWCI	6.GravWA	10.Radiant
3.H Pump	7.Electric	11.Radiant
Cool Type	**0% 9 None**	
1.Refrig	4.W&C Air	7.RadHW
2.Evapor	5.Monitor-	8.
3.H Pump	6.Monitor-	9.None
Kitchen Style	**2 Typical**	
1.Modern	4.Obsolete	7.
2.Typical	5.	8.
3.Old Type	6.	9.None
Bath(s) Style	**2 Typical Bath(s)**	
1.Modern	4.Obsolete	7.
2.Typical	5.	8.
3.Old Type	6.	9.None
# Rooms	**0**	
# Bedrooms	**0**	
# Full Baths	**2**	
# Half Baths	**0**	
# Addn Fixtures	**0**	
# Fireplaces	**0**	

TRIO Software
A Division of Harris Computer Systems

Layout	**1 Typical**	
1.Typical	4.	7.
2.Inadeq	5.	8.
3.	6.	9.
Attic	**9 None**	
1.1/4 Fin	4.Full Fin	7.
2.1/2 Fin	5.Fl/Stair	8.
3.3/4 Fin	6.	9.None
Insulation	**1 Full**	
1.Full	4.Minimal	7.
2.Heavy	5.Partial	8.
3.Capped	6.	9.None
Unfinished %	**0%**	
Grade & Factor	**3 Average 95%**	
1.E Grade	4.B Grade	7.AAA Grad
2.D Grade	5.A Grade	8.M&S
3.C Grade	6.AA Grade	9.Same
SQFT (Footprint)	**1568**	
Condition	**4 Average**	
1.Poor	4.Avg	7.V G
2.Fair	5.Avg+	8.Exc
3.Avg-	6.Good	9.Same
Phys. % Good	**0%**	
Funct. % Good	**100%**	
Functional Code	**9 None**	
1.Incomp	4.Delap	7.No Power
2.O-Built	5.Bsmt	8.LongTerm
3.Damage	6.Common	9.None
Econ. % Good	**100%**	
Economic Code	**None**	
0.None	3.No Power	9.None
1.Location	4.Generate	8.
2.Encroach	5.Multi-Fa	9.
Entrance Code	**5 Estimated**	
1.Interior	4.Vacant	7.
2.Refusal	5.Estimate	8.
3.Informed	6.Existing	9.
Information Code	**5 Estimate**	
1.Owner	4.Agent	7.Vacant
2.Relative	5.Estimate	8.
3.Tenant	6.Other	9.

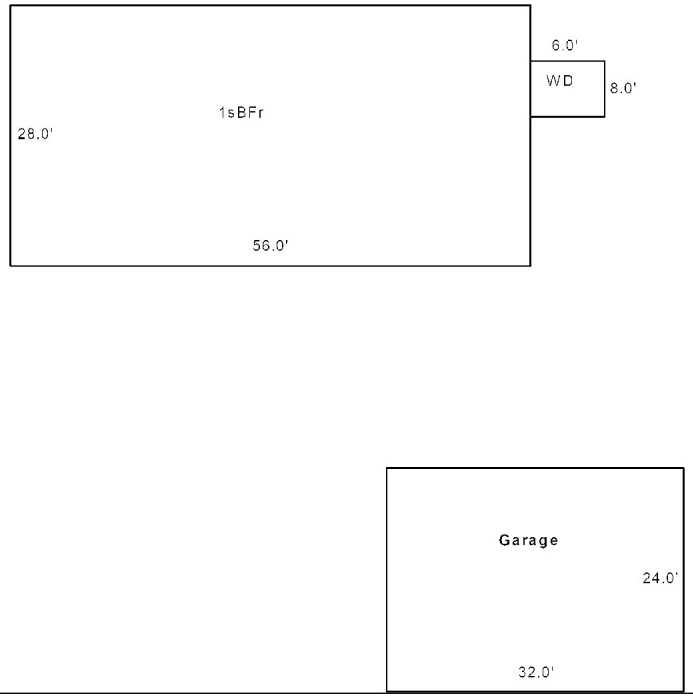

Date Inspected 10/10/2018

Additions, Outbuildings & Improvements

Type	Year	Units	Grade	Cond	Phys.	Funct.	Sound Value
23 Frame Garage	2015	768	3 100	4	0 %	100 %	
68 Wood Deck/s	2016	48	3 100	4	0 %	100 %	
					%	%	
					%	%	
					%	%	
					%	%	
					%	%	
					%	%	
					%	%	
					%	%	

1.One Story Fram
2.Two Story Fram
3.Three Story Fr
4.1 & 1/2 Story
5.1 & 3/4 Story
6.2 & 1/2 Story
21.Open Frame Por
22.Encl Frame Por
23.Frame Garage
24.Frame Shed
25.Frame Bay Wind
26.1SFr Overhang
27.Unfin Basement
28.Unfinished Att
29.Finished Attic

Map Lot R12-013B | Account 218 | Location 1423 LEWISTON ROAD | Card 1 Of 2 | 11/24/2020

BROWN, CALVIN E
BROWN, GALE E
P O BOX 1
LITCHFIELD ME 04350

B3438P334

Property Data

Neighborhood **113 Lewiston Road**

Tree Growth Year **0**

X Coordinate **0**

Y Coordinate **0**

Zone/Land Use **11 Residential**

Secondary Zone

Topography **2 Rolling**

1.Level	4.Below St	7.Res Protec
2.Rolling	5.Low	8.
3.Above St	6.Swampy	9.

Utilities **4 Drilled Well** **6 Septic System**

1.Public	4.Dr Well	7.Cesspool
2.Water	5.Dug Well	8.Lake/Pond
3.Sewer	6.Septic	9.None

Street **1 Paved**

1.Paved	4.Proposed	7.
2.Semi Imp	5.R/O/W	8.
3.Gravel	6.	9.None

0

0

Sale Data

Sale Date

Price

Sale Type

1.Land	4.MFG UNIT	7.
2.L & B	5.Other	8.
3.Building	6.	9.

Financing

1.Convent	4.Seller	7.
2.FHA/VA	5.Private	8.
3.Assumed	6.Cash	9.Unknown

Validity

1.Valid	4.Split	7.Renovate
2.Related	5.Partial	8.Other
3.Distress	6.Exempt	9.

Verified

1.Buyer	4.Agent	7.Family
2.Seller	5.Pub Rec	8.Other
3.Lender	6.MLS	9.

Assessment Record

Year	Land	Buildings	Exempt	Total
2007	56,425	275,491	13,000	318,916
2008	56,425	275,471	12,350	319,546
2009	53,800	316,739	9,500	361,039
2010	53,800	310,517	10,000	354,317
2011	53,800	239,074	10,000	282,874
2012	53,800	181,362	10,000	225,162
2013	53,800	181,267	10,000	225,067
2014	53,800	179,232	10,000	223,032
2015	53,800	179,136	10,000	222,936
2016	53,800	178,169	15,000	216,969
2017	53,800	176,991	20,000	210,791
2018	53,800	176,040	19,200	210,640
2019	61,100	228,500	20,000	269,600
2020	61,100	228,500	25,000	264,600

Land Data

Front Foot	Type	Effective Frontage	Effective Depth	Influence Factor	Influence Code
11.1-100				%	
12.101-200				%	
13.201+				%	
14.				%	
15.				%	
				%	
				%	

Square Foot		Square Feet		
16.Regular Lot			%	
17.Secondary Lot			%	
18.Excess Land			%	
19.Condominium			%	
20.Miscellaneous			%	
			%	
			%	

Fract. Acre	Acreage/Sites				
21.Houselot (Frac	24	1.00	100	%	0
22.Baselot(Fract)	26	5.00	100	%	0
23.	27	1.25	100	%	0
Acres	44	1.00	100	%	0
24.Houselot	40	2.00	100	%	0
25.Baselot				%	
26.Rear 1				%	
27.Rear 2					
28.Rear 3					
29.Rear 4					

Total Acreage 9.25

Influence Codes

1.Unimproved
2.Excess Frtg
3.Topography
4.Size/Shape
5.Access
6.Restriction
7.Right of Way
8.View/Environ
9.Fract Share

Acres

30.Frontage 1
31.Frontage 2
32.Tillable
33.Tillable
34.Softwood F&O
35.Mixed Wood F&O
36.Hardwood F&O
37.Softwood TG
38.Mixed Wood TG
39.Hardwood TG
40.Wasteland
41.Gravel Pit
42.Mobile Home Si
43.Camp Site
44.Lot Improvemen
45.Access Right
46.Golf Course

Inspection Witnessed By:

X Date

No./Date	Description	Date Insp.

Notes:

'19 PER FURTHER REVIEW, 2760 SQFT OUTBUILDING NOT ON LOT. DELETE & ABATE

Litchfield

Litchfield

Map Lot R12-013B | Account 218 | Location 1423 LEWISTON ROAD | Card 1 Of 2 | 11/24/2020

Building Style	**1 Conventional**	
0.Uncoded	4.Cape	8.Log
1.Conv.	5.Garrison	9.Other
2.Ranch	6.Split	10.Tri-Lev
3.R Ranch	7.Contemp	11.Earth O
Dwelling Units	**1**	
Other Units	**0**	
Stories	**4 One & 1/2 Story**	
1.1	4.1.5	7.1.25
2.2	5.1.75	8.3.5
3.3	6.2.5	9.4
Exterior Walls	**2 Vinyl**	
0.Uncoded	4.Asbestos	8.Concrete
1.Wd Clapb	5.Stucco	9.Other
2.Vinyl	6.Brick	10.Wd shin
3.Compos.	7.Stone	11.T1-11
Roof Surface	**1 Asphalt Shingles**	
1.Asphalt	4.Composit	7.Rolled R
2.Slate	5.Wood	8.
3.Metal	6.Other	9.
SF Masonry Trim	**0**	
OPEN-3-CUSTOM	**0**	
OPEN-4-CUSTOM	**0**	
Year Built	**1988**	
Year Remodeled	**0**	
Foundation	**1 Concrete**	
1.Concrete	4.Wood	7.
2.C Block	5.Slab	8.
3.Br/Stone	6.Piers	9.
Basement	**4 Full Basement**	
1.1/4 Bmt	4.Full Bmt	7.
2.1/2 Bmt	5.Crawl Sp	8.
3.3/4 Bmt	6.	9.None
Bsmt Gar # Cars	**0**	
Wet Basement	**1 Dry Basement**	
1.Dry	4.Dirt Flr	7.
2.Damp	5.	8.
3.Wet	6.	9.

SF Bsmt Living	**0**	
Fin Bsmt Grade	**0 0**	
OPEN-5-CUSTOMIZE	**0**	
Heat Type	**100%**	**5 Forced Warm Air**
0.Uncoded	4.Steam	8.Fl/Wall
1.HWBB	5.FWA	9.No Heat
2.HWCI	6.GravWA	10.Radiant
3.H Pump	7.Electric	11.Radiant
Cool Type	**0%**	**9 None**
1.Refrig	4.W&C Air	7.RadHW
2.Evapor	5.Monitor-	8.
3.H Pump	6.Monitor-	9.None
Kitchen Style	**2 Typical**	
1.Modern	4.Obsolete	7.
2.Typical	5.	8.
3.Old Type	6.	9.None
Bath(s) Style	**2 Typical Bath(s)**	
1.Modern	4.Obsolete	7.
2.Typical	5.	8.
3.Old Type	6.	9.None
# Rooms	**10**	
# Bedrooms	**4**	
# Full Baths	**3**	
# Half Baths	**1**	
# Addn Fixtures	**0**	
# Fireplaces	**0**	

TRIO Software
A Division of Harris Computer Systems

Layout	**1 Typical**	
1.Typical	4.	7.
2.Inadeq	5.	8.
3.	6.	9.
Attic	**9 None**	
1.1/4 Fin	4.Full Fin	7.
2.1/2 Fin	5.Fl/Stair	8.
3.3/4 Fin	6.	9.None
Insulation	**1 Full**	
1.Full	4.Minimal	7.
2.Heavy	5.Partial	8.
3.Capped	6.	9.None
Unfinished %	**0%**	
Grade & Factor	**3 Average 105%**	
1.E Grade	4.B Grade	7.AAA Grad
2.D Grade	5.A Grade	8.M&S
3.C Grade	6.AA Grade	9.Same
SQFT (Footprint)	**1008**	
Condition	**5 Above Average**	
1.Poor	4.Avg	7.V G
2.Fair	5.Avg+	8.Exc
3.Avg-	6.Good	9.Same
Phys. % Good	**0%**	
Funct. % Good	**100%**	
Functional Code	**9 None**	
1.Incomp	4.Delap	7.No Power
2.O-Built	5.Bsmt	8.LongTerm
3.Damage	6.Common	9.None
Econ. % Good	**100%**	
Economic Code	**None**	
0.None	3.No Power	9.None
1.Location	4.Generate	8.
2.Encroach	5.Multi-Fa	9.
Entrance Code	**1 Interior Inspect**	
1.Interior	4.Vacant	7.
2.Refusal	5.Estimate	8.
3.Informed	6.Existing	9.
Information Code	**1 Owner**	
1.Owner	4.Agent	7.Vacant
2.Relative	5.Estimate	8.
3.Tenant	6.Other	9.

Date Inspected 12/02/2011

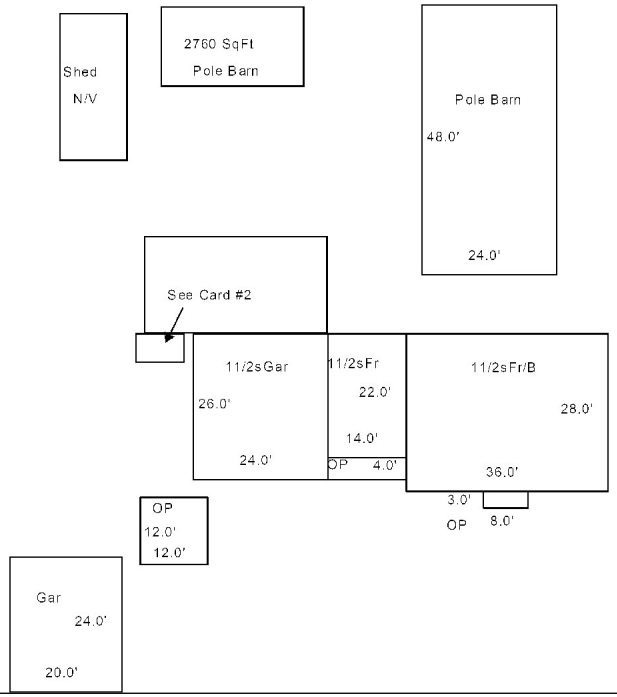

Additions, Outbuildings & Improvements

Type	Year	Units	Grade	Cond	Phys.	Funct.	Sound Value
21 Open Frame	0	24	0 0	0	0 %	0 %	
4 1 & 1/2 Story Fr	0	308	0 0	0	0 %	0 %	
21 Open Frame	0	56	0 0	0	0 %	0 %	
73 1 1/2s Garage	0	624	0 0	0	0 %	0 %	
23 Frame Garage	0	480	3 100	3	0 %	75 %	
21 Open Frame	1989	144	2 100	4	0 %	100 %	
81 Barn	0	1152	2 100	3	0 %	75 %	
81 Barn	0	2760	2 100	3	0 %	75 %	
					%	%	
					%	%	

1.One Story Fram
2.Two Story Fram
3.Three Story Fr
4.1 & 1/2 Story
5.1 & 3/4 Story
6.2 & 1/2 Story
21.Open Frame Por
22.Encl Frame Por
23.Frame Garage
24.Frame Shed
25.Frame Bay Wind
26.1SFr Overhang
27.Unfin Basement
28.Unfinished Att
29.Finished Attic

BROWN, CALVIN E
BROWN, GALE E
P O BOX 1
LITCHFIELD ME 04350

B3438P334

Property Data

Neighborhood **113 Lewiston Road**

Tree Growth Year **0**

X Coordinate **0**

Y Coordinate **0**

Zone/Land Use **11 Residential**

Secondary Zone

Topography **2 Rolling**

1.Level	4.Below St	7.Res Protec
2.Rolling	5.Low	8.
3.Above St	6.Swampy	9.

Utilities **4 Drilled Well** **6 Septic System**

1.Public	4.Dr Well	7.Cesspool
2.Water	5.Dug Well	8.Lake/Pond
3.Sewer	6.Septic	9.None

Street **1 Paved**

1.Paved	4.Proposed	7.
2.Semi Imp	5.R/O/W	8.
3.Gravel	6.	9.None

0

0

Sale Data

Sale Date

Price

Sale Type

1.Land	4.MFG UNIT	7.
2.L & B	5.Other	8.
3.Building	6.	9.

Financing

1.Convent	4.Seller	7.
2.FHA/VA	5.Private	8.
3.Assumed	6.Cash	9.Unknown

Validity

1.Valid	4.Split	7.Renovate
2.Related	5.Partial	8.Other
3.Distress	6.Exempt	9.

Verified

1.Buyer	4.Agent	7.Family
2.Seller	5.Pub Rec	8.Other
3.Lender	6.MLS	9.

Assessment Record

Year	Land	Buildings	Exempt	Total
2007	0	42,271	0	42,271
2008	0	42,271	0	42,271
2011	0	131,818	0	131,818
2012	0	131,733	0	131,733
2013	0	136,407	0	136,407
2014	0	134,933	0	134,933
2015	0	134,743	0	134,743
2016	0	133,108	0	133,108
2017	0	133,079	0	133,079
2018	0	131,445	0	131,445
2019	0	64,400	0	64,400
2020	0	64,400	0	64,400

Land Data

Front Foot	Type	Effective Frontage	Effective Depth	Influence Factor	Influence Code
11.1-100				%	
12.101-200				%	
13.201+				%	
14.				%	
15.				%	
				%	
				%	
Square Foot		**Square Feet**			
16.Regular Lot				%	
17.Secondary Lot				%	
18.Excess Land				%	
19.Condominium				%	
20.Miscellaneous				%	
				%	
				%	
Fract. Acre		**Acreage/Sites**			
21.Houselot (Frac				%	
22.Baselot(Fract)				%	
23.				%	
Acres				%	
24.Houselot				%	
25.Baselot				%	
26.Rear 1				%	
27.Rear 2				%	
28.Rear 3				%	
29.Rear 4				%	

Total Acreage 0.00

Influence Codes

1.Unimproved
2.Excess Frtg
3.Topography
4.Size/Shape
5.Access
6.Restriction
7.Right of Way
8.View/Environ
9.Fract Share

Acres

30.Frontage 1
31.Frontage 2
32.Tillable
33.Tillable
34.Softwood F&O
35.Mixed Wood F&O
36.Hardwood F&O
37.Softwood TG
38.Mixed Wood TG
39.Hardwood TG
40.Wasteland
41.Gravel Pit
42.Mobile Home Si
43.Camp Site
44.Lot Improvemen
45.Access Right
46.Golf Course

Inspection Witnessed By:

X Date

No./Date	Description	Date Insp.

Notes:

Litchfield

Litchfield

Map Lot R12-013B | Account 218 | Location 1423 LEWISTON ROAD | Card 2 Of 2 | 11/24/2020

Building Style **1 Conventional**		
0.Uncoded	4.Cape	8.Log
1.Conv.	5.Garrison	9.Other
2.Ranch	6.Split	10.Tri-Lev
3.R Ranch	7.Contemp	11.Earth O
Dwelling Units **1**		
Other Units **0**		
Stories **1 One Story**		
1.1	4.1.5	7.1.25
2.2	5.1.75	8.3.5
3.3	6.2.5	9.4
Exterior Walls **2 Vinyl**		
0.Uncoded	4.Asbestos	8.Concrete
1.Wd Clapb	5.Stucco	9.Other
2.Vinyl	6.Brick	10.Wd shin
3.Compos.	7.Stone	11.T1-11
Roof Surface **1 Asphalt Shingles**		
1.Asphalt	4.Composit	7.Rolled R
2.Slate	5.Wood	8.
3.Metal	6.Other	9.
SF Masonry Trim **0**		
OPEN-3-CUSTOM **0**		
OPEN-4-CUSTOM **0**		
Year Built **1988**		
Year Remodeled **0**		
Foundation **5 Concrete Slab**		
1.Concrete	4.Wood	7.
2.C Block	5.Slab	8.
3.Br/Stone	6.Piers	9.
Basement **9 No Basement**		
1.1/4 Bmt	4.Full Bmt	7.
2.1/2 Bmt	5.Crawl Sp	8.
3.3/4 Bmt	6.	9.None
Bsmt Gar # Cars **0**		
Wet Basement **9 No Basement**		
1.Dry	4.Dirt Flr	7.
2.Damp	5.	8.
3.Wet	6.	9.

SF Bsmt Living **0**		
Fin Bsmt Grade **0 0**		
OPEN-5-CUSTOMIZE **0**		
Heat Type **100% 5 Forced Warm Air**		
0.Uncoded	4.Steam	8.Fl/Wall
1.HWBB	5.FWA	9.No Heat
2.HWCI	6.GravWA	10.Radiant
3.H Pump	7.Electric	11.Radiant
Cool Type **0% 9 None**		
1.Refrig	4.W&C Air	7.RadHW
2.Evapor	5.Monitor-	8.
3.H Pump	6.Monitor-	9.None
Kitchen Style **2 Typical**		
1.Modern	4.Obsolete	7.
2.Typical	5.	8.
3.Old Type	6.	9.None
Bath(s) Style **2 Typical Bath(s)**		
1.Modern	4.Obsolete	7.
2.Typical	5.	8.
3.Old Type	6.	9.None
# Rooms **0**		
# Bedrooms **0**		
# Full Baths **0**		
# Half Baths **0**		
# Addn Fixtures **0**		
# Fireplaces **0**		

TRIO Software
A Division of Harris Computer Systems

Layout **1 Typical**		
1.Typical	4.	7.
2.Inadeq	5.	8.
3.	6.	9.
Attic **9 None**		
1.1/4 Fin	4.Full Fin	7.
2.1/2 Fin	5.Fl/Stair	8.
3.3/4 Fin	6.	9.None
Insulation **1 Full**		
1.Full	4.Minimal	7.
2.Heavy	5.Partial	8.
3.Capped	6.	9.None
Unfinished % **0%**		
Grade & Factor **2 Fair 80%**		
1.E Grade	4.B Grade	7.AAA Grad
2.D Grade	5.A Grade	8.M&S
3.C Grade	6.AA Grade	9.Same
SQFT (Footprint) **1360**		
Condition **4 Average**		
1.Poor	4.Avg	7.V G
2.Fair	5.Avg+	8.Exc
3.Avg-	6.Good	9.Same
Phys. % Good **0%**		
Funct. % Good **100%**		
Functional Code **9 None**		
1.Incomp	4.Delap	7.No Power
2.O-Built	5.Bsmt	8.LongTerm
3.Damage	6.Common	9.None
Econ. % Good **100%**		
Economic Code **None**		
0.None	3.No Power	9.None
1.Location	4.Generate	8.
2.Encroach	5.Multi-Fa	9.
Entrance Code **5 Estimated**		
1.Interior	4.Vacant	7.
2.Refusal	5.Estimate	8.
3.Informed	6.Existing	9.
Information Code **5 Estimate**		
1.Owner	4.Agent	7.Vacant
2.Relative	5.Estimate	8.
3.Tenant	6.Other	9.

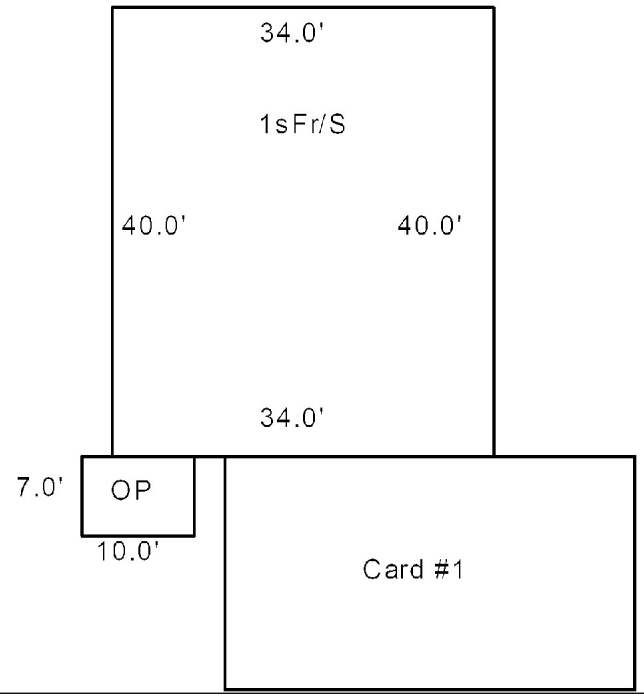

Date Inspected 10/18/2018

Additions, Outbuildings & Improvements

Type	Year	Units	Grade	Cond	Phys.	Funct.	Sound Value
21 Open Frame	0	70	0 0	0	0 %	0 %	
					%	%	
					%	%	
					%	%	
					%	%	
					%	%	
					%	%	
					%	%	
					%	%	
					%	%	

1.One Story Fram
2.Two Story Fram
3.Three Story Fr
4.1 & 1/2 Story
5.1 & 3/4 Story
6.2 & 1/2 Story
21.Open Frame Por
22.Encl Frame Por
23.Frame Garage
24.Frame Shed
25.Frame Bay Wind
26.1SFr Overhang
27.Unfin Basement
28.Unfinished Att
29.Finished Attic

Map Lot R12-013C | Account 1965 | Location 15 CUMMINGS DRIVE | Card 1 Of 1 | 11/24/2020

CUMMINGS, JR., DAVID E
CUMMINGS, SHARON M
15 CUMMINGS LANE
LITCHFIELD ME 04350

B5087P79 B11498P244 B12394P70

Previous Owner
CUMMINGS, SR., DAVID E
CUMMINGS, ROBIN
1838 HALLOWELL ROAD
LITCHFIELD ME 04350
Sale Date: 8/24/2016

Previous Owner
CUMMINGS, JR., DAVID E
15 CUMMINGS DRIVE

LITCHFIELD ME 04350
Sale Date: 8/29/2013

Inspection Witnessed By:

X Date

No./Date	Description	Date Insp.

Notes:

Litchfield

Property Data

Neighborhood **48 Cummings Drive**

Tree Growth Year **0**

X Coordinate **0**

Y Coordinate **0**

Zone/Land Use **11 Residential**

Secondary Zone

Topography **2 Rolling**

1.Level	4.Below St	7.Res Protec
2.Rolling	5.Low	8.
3.Above St	6.Swampy	9.

Utilities **4 Drilled Well** **6 Septic System**

1.Public	4.Dr Well	7.Cesspool
2.Water	5.Dug Well	8.Lake/Pond
3.Sewer	6.Septic	9.None

Street **1 Paved**

1.Paved	4.Proposed	7.
2.Semi Imp	5.R/O/W	8.
3.Gravel	6.	9.None

0

0

Sale Data

Sale Date **8/24/2016**

Price **68,500**

Sale Type **2 Land & Buildings**

1.Land	4.MFG UNIT	7.
2.L & B	5.Other	8.
3.Building	6.	9.

Financing **9 Unknown**

1.Convent	4.Seller	7.
2.FHA/VA	5.Private	8.
3.Assumed	6.Cash	9.Unknown

Validity **2 Related Parties**

1.Valid	4.Split	7.Renovate
2.Related	5.Partial	8.Other
3.Distress	6.Exempt	9.

Verified **5 Public Record**

1.Buyer	4.Agent	7.Family
2.Seller	5.Pub Rec	8.Other
3.Lender	6.MLS	9.

Assessment Record

Year	Land	Buildings	Exempt	Total
2007	40,000	198,743	13,000	225,743
2008	40,000	196,671	12,350	224,321
2009	40,000	236,481	9,500	266,981
2010	40,000	196,628	10,000	226,628
2011	40,000	199,769	10,000	229,769
2012	40,000	199,769	10,000	229,769
2013	40,000	199,552	10,000	229,552
2014	40,000	197,537	0	237,537
2015	40,000	197,311	0	237,311
2016	40,000	195,523	0	235,523
2017	40,000	195,081	0	235,081
2018	40,000	193,067	0	233,067
2019	45,000	195,100	0	240,100
2020	45,000	195,100	25,000	215,100

Land Data

Front Foot

11.1-100
12.101-200
13.201+
14.
15.

Square Foot

16.Regular Lot
17.Secondary Lot
18.Excess Land
19.Condominium
20.Miscellaneous

Fract. Acre

21.Houselot (Frac
22.Baselot(Fract)
23.

Acres

24.Houselot
25.Baselot
26.Rear 1
27.Rear 2
28.Rear 3
29.Rear 4

Type	Effective Frontage	Effective Depth	Influence Factor	Influence Code
			%	
			%	
			%	
			%	
			%	
			%	
			%	
Square Feet				
			%	
			%	
			%	
			%	
			%	
			%	
			%	
Acreage/Sites				
24	1.00		100 %	0
44	1.00		100 %	0
			%	
			%	
			%	
			%	
			%	

Total Acreage 1.00

Influence Codes

1.Unimproved
2.Excess Frtg
3.Topography
4.Size/Shape
5.Access
6.Restriction
7.Right of Way
8.View/Environ
9.Fract Share

Acres

30.Frontage 1
31.Frontage 2
32.Tillable
33.Tillable
34.Softwood F&O
35.Mixed Wood F&O
36.Hardwood F&O
37.Softwood TG
38.Mixed Wood TG
39.Hardwood TG
40.Wasteland
41.Gravel Pit
42.Mobile Home Si
43.Camp Site
44.Lot Improvemen
45.Access Right
46.Golf Course

Litchfield

Map Lot R12-013C | Account 1965 | Location 15 CUMMINGS DRIVE | Card 1 Of 1 | 11/24/2020

Building Style **1 Conventional**		
0.Uncoded	4.Cape	8.Log
1.Conv.	5.Garrison	9.Other
2.Ranch	6.Split	10.Tri-Lev
3.R Ranch	7.Contemp	11.Earth O
Dwelling Units **1**		
Other Units **0**		
Stories **2 Two Story**		
1.1	4.1.5	7.1.25
2.2	5.1.75	8.3.5
3.3	6.2.5	9.4
Exterior Walls **2 Vinyl**		
0.Uncoded	4.Asbestos	8.Concrete
1.Wd Clapb	5.Stucco	9.Other
2.Vinyl	6.Brick	10.Wd shin
3.Compos.	7.Stone	11.T1-11
Roof Surface **1 Asphalt Shingles**		
1.Asphalt	4.Composit	7.Rolled R
2.Slate	5.Wood	8.
3.Metal	6.Other	9.
SF Masonry Trim **0**		
OPEN-3-CUSTOM **0**		
OPEN-4-CUSTOM **0**		
Year Built **2002**		
Year Remodeled **0**		
Foundation **1 Concrete**		
1.Concrete	4.Wood	7.
2.C Block	5.Slab	8.
3.Br/Stone	6.Piers	9.
Basement **4 Full Basement**		
1.1/4 Bmt	4.Full Bmt	7.
2.1/2 Bmt	5.Crawl Sp	8.
3.3/4 Bmt	6.	9.None
Bsmt Gar # Cars **0**		
Wet Basement **1 Dry Basement**		
1.Dry	4.Dirt Flr	7.
2.Damp	5.	8.
3.Wet	6.	9.

SF Bsmt Living **0**		
Fin Bsmt Grade **0 0**		
OPEN-5-CUSTOMIZE **0**		
Heat Type **100%** **1 Hot Water BB**		
0.Uncoded	4.Steam	8.Fl/Wall
1.HWBB	5.FWA	9.No Heat
2.HWCI	6.GravWA	10.Radiant
3.H Pump	7.Electric	11.Radiant
Cool Type **0%** **9 None**		
1.Refrig	4.W&C Air	7.RadHW
2.Evapor	5.Monitor-	8.
3.H Pump	6.Monitor-	9.None
Kitchen Style **2 Typical**		
1.Modern	4.Obsolete	7.
2.Typical	5.	8.
3.Old Type	6.	9.None
Bath(s) Style **2 Typical Bath(s)**		
1.Modern	4.Obsolete	7.
2.Typical	5.	8.
3.Old Type	6.	9.None
# Rooms **0**		
# Bedrooms **0**		
# Full Baths **2**		
# Half Baths **1**		
# Addn Fixtures **1**		
# Fireplaces **0**		

TRIO Software
A Division of Harris Computer Systems

Layout **1 Typical**		
1.Typical	4.	7.
2.Inadeq	5.	8.
3.	6.	9.
Attic **9 None**		
1.1/4 Fin	4.Full Fin	7.
2.1/2 Fin	5.Fl/Stair	8.
3.3/4 Fin	6.	9.None
Insulation **1 Full**		
1.Full	4.Minimal	7.
2.Heavy	5.Partial	8.
3.Capped	6.	9.None
Unfinished % **0%**		
Grade & Factor **3 Average 100%**		
1.E Grade	4.B Grade	7.AAA Grad
2.D Grade	5.A Grade	8.M&S
3.C Grade	6.AA Grade	9.Same
SQFT (Footprint) **1064**		
Condition **4 Average**		
1.Poor	4.Avg	7.V G
2.Fair	5.Avg+	8.Exc
3.Avg-	6.Good	9.Same
Phys. % Good **0%**		
Funct. % Good **100%**		
Functional Code **9 None**		
1.Incomp	4.Delap	7.No Power
2.O-Built	5.Bsmt	8.LongTerm
3.Damage	6.Common	9.None
Econ. % Good **100%**		
Economic Code **None**		
0.None	3.No Power	9.None
1.Location	4.Generate	8.
2.Encroach	5.Multi-Fa	9.
Entrance Code **5 Estimated**		
1.Interior	4.Vacant	7.
2.Refusal	5.Estimate	8.
3.Informed	6.Existing	9.
Information Code **5 Estimate**		
1.Owner	4.Agent	7.Vacant
2.Relative	5.Estimate	8.
3.Tenant	6.Other	9.

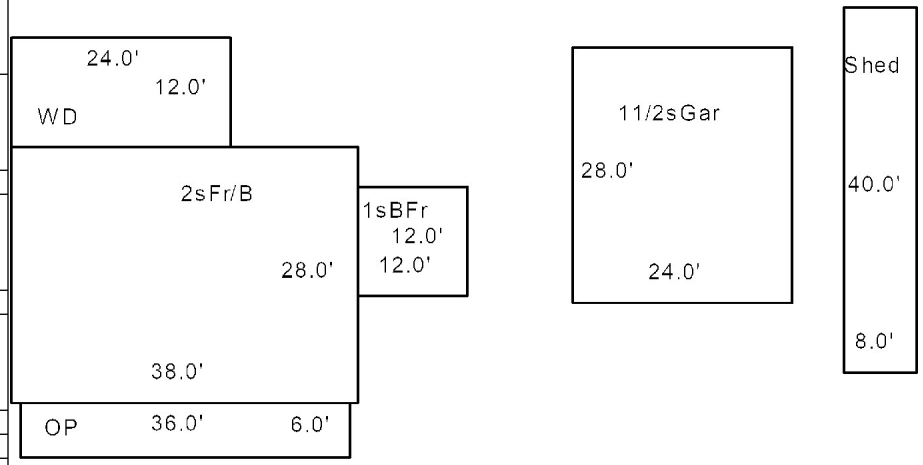

Date Inspected 10/17/2018

Additions, Outbuildings & Improvements

Type	Year	Units	Grade	Cond	Phys.	Funct.	Sound Value
38 1 Story Bsmt	0	144	0 0	0	0 %	0 %	
21 Open Frame	0	216	0 0	0	0 %	0 %	
68 Wood Deck/s	0	288	0 0	0	0 %	0 %	
73 1 1/2s Garage	0	672	3 100	3	0 %	100 %	
24 Frame Shed	0				%	%	1,000
					%	%	
					%	%	
					%	%	
					%	%	
					%	%	

1.One Story Fram
2.Two Story Fram
3.Three Story Fr
4.1 & 1/2 Story
5.1 & 3/4 Story
6.2 & 1/2 Story
21.Open Frame Por
22.Encl Frame Por
23.Frame Garage
24.Frame Shed
25.Frame Bay Wind
26.1SFr Overhang
27.Unfin Basement
28.Unfinished Att
29.Finished Attic

Map Lot R12-014 Account 407 Location 1467 LEWISTON ROAD Card 1 Of 1 11/24/2020

DAGGETT, JOHN L
DAGGETT, RITA
1467 LEWISTON ROAD
LITCHFIELD ME 04350

B13485P306

Property Data

Neighborhood **113 Lewiston Road**

Tree Growth Year **0**

X Coordinate **0**

Y Coordinate **0**

Zone/Land Use **11 Residential**

Secondary Zone

Topography **2 Rolling**

1.Level	4.Below St	7.Res Protec
2.Rolling	5.Low	8.
3.Above St	6.Swampy	9.

Utilities **4 Drilled Well** **6 Septic System**

1.Public	4.Dr Well	7.Cesspool
2.Water	5.Dug Well	8.Lake/Pond
3.Sewer	6.Septic	9.None

Street **1 Paved**

1.Paved	4.Proposed	7.
2.Semi Imp	5.R/O/W	8.
3.Gravel	6.	9.None

0

0

Sale Data

Sale Date

Price

Sale Type

1.Land	4.MFG UNIT	7.
2.L & B	5.Other	8.
3.Building	6.	9.

Financing

1.Convent	4.Seller	7.
2.FHA/VA	5.Private	8.
3.Assumed	6.Cash	9.Unknown

Validity

1.Valid	4.Split	7.Renovate
2.Related	5.Partial	8.Other
3.Distress	6.Exempt	9.

Verified

1.Buyer	4.Agent	7.Family
2.Seller	5.Pub Rec	8.Other
3.Lender	6.MLS	9.

Assessment Record

Year	Land	Buildings	Exempt	Total
2007	42,900	149,443	13,000	179,343
2008	42,900	149,369	12,350	179,919
2009	42,500	184,005	9,500	217,005
2010	42,500	144,090	10,000	176,590
2011	42,500	139,803	10,000	172,303
2012	42,500	139,803	10,000	172,303
2013	42,500	139,803	10,000	172,303
2014	42,500	139,635	10,000	172,135
2015	42,500	138,128	10,000	170,628
2016	42,500	137,960	15,000	165,460
2017	42,500	137,960	20,000	160,460
2018	42,500	136,287	19,200	159,587
2019	48,000	136,200	20,000	164,200
2020	48,000	136,200	25,000	159,200

Land Data

Front Foot

11.1-100
12.101-200
13.201+
14.
15.

Square Foot

16.Regular Lot
17.Secondary Lot
18.Excess Land
19.Condominium
20.Miscellaneous

Fract. Acre

21.Houselot (Frac
22.Baselot(Fract)
23.

Acres

24.Houselot
25.Baselot
26.Rear 1
27.Rear 2
28.Rear 3
29.Rear 4

Type	Effective Frontage	Effective Depth	Influence Factor	Influence Code
			%	
			%	
			%	
			%	
			%	
			%	
			%	
	Square Feet			
			%	
			%	
			%	
			%	
			%	
			%	
			%	
	Acreage/Sites			
24	1.00	100	%	0
26	1.00	100	%	0
44	1.00	100	%	0
			%	
			%	
			%	
			%	

Total Acreage 2.00

Influence Codes

1.Unimproved
2.Excess Frtg
3.Topography
4.Size/Shape
5.Access
6.Restriction
7.Right of Way
8.View/Environ
9.Fract Share

Acres

30.Frontage 1
31.Frontage 2
32.Tillable
33.Tillable
34.Softwood F&O
35.Mixed Wood F&O
36.Hardwood F&O
37.Softwood TG
38.Mixed Wood TG
39.Hardwood TG
40.Wasteland
41.Gravel Pit
42.Mobile Home Si
43.Camp Site
44.Lot Improvemen
45.Access Right
46.Golf Course

Inspection Witnessed By:

X Date

No./Date	Description	Date Insp.

Notes:

Litchfield

Litchfield

Map Lot R12-014 | Account 407 | Location 1467 LEWISTON ROAD | Card 1 Of 1 | 11/24/2020

Building Style **1 Conventional**		
0.Uncoded	4.Cape	8.Log
1.Conv.	5.Garrison	9.Other
2.Ranch	6.Split	10.Tri-Lev
3.R Ranch	7.Contemp	11.Earth O
Dwelling Units **1**		
Other Units **0**		
Stories **1 One Story**		
1.1	4.1.5	7.1.25
2.2	5.1.75	8.3.5
3.3	6.2.5	9.4
Exterior Walls **2 Vinyl**		
0.Uncoded	4.Asbestos	8.Concrete
1.Wd Clapb	5.Stucco	9.Other
2.Vinyl	6.Brick	10.Wd shin
3.Compos.	7.Stone	11.T1-11
Roof Surface **1 Asphalt Shingles**		
1.Asphalt	4.Composit	7.Rolled R
2.Slate	5.Wood	8.
3.Metal	6.Other	9.
SF Masonry Trim **0**		
OPEN-3-CUSTOM **0**		
OPEN-4-CUSTOM **0**		
Year Built **1980**		
Year Remodeled **0**		
Foundation **1 Concrete**		
1.Concrete	4.Wood	7.
2.C Block	5.Slab	8.
3.Br/Stone	6.Piers	9.
Basement **4 Full Basement**		
1.1/4 Bmt	4.Full Bmt	7.
2.1/2 Bmt	5.Crawl Sp	8.
3.3/4 Bmt	6.	9.None
Bsmt Gar # Cars **0**		
Wet Basement **1 Dry Basement**		
1.Dry	4.Dirt Flr	7.
2.Damp	5.	8.
3.Wet	6.	9.

SF Bsmt Living **840**		
Fin Bsmt Grade **3 100**		
OPEN-5-CUSTOMIZE **0**		
Heat Type **100% 1 Hot Water BB**		
0.Uncoded	4.Steam	8.Fl/Wall
1.HWBB	5.FWA	9.No Heat
2.HWCI	6.GravWA	10.Radiant
3.H Pump	7.Electric	11.Radiant
Cool Type **0% 9 None**		
1.Refrig	4.W&C Air	7.RadHW
2.Evapor	5.Monitor-	8.
3.H Pump	6.Monitor-	9.None
Kitchen Style **2 Typical**		
1.Modern	4.Obsolete	7.
2.Typical	5.	8.
3.Old Type	6.	9.None
Bath(s) Style **2 Typical Bath(s)**		
1.Modern	4.Obsolete	7.
2.Typical	5.	8.
3.Old Type	6.	9.None
# Rooms **0**		
# Bedrooms **0**		
# Full Baths **2**		
# Half Baths **0**		
# Addn Fixtures **0**		
# Fireplaces **0**		

TRIO Software
A Division of Harris Computer Systems

Layout **1 Typical**		
1.Typical	4.	7.
2.Inadeq	5.	8.
3.	6.	9.
Attic **4 Full Finished**		
1.1/4 Fin	4.Full Fin	7.
2.1/2 Fin	5.Fl/Stair	8.
3.3/4 Fin	6.	9.None
Insulation **1 Full**		
1.Full	4.Minimal	7.
2.Heavy	5.Partial	8.
3.Capped	6.	9.None
Unfinished % **0%**		
Grade & Factor **3 Average 100%**		
1.E Grade	4.B Grade	7.AAA Grad
2.D Grade	5.A Grade	8.M&S
3.C Grade	6.AA Grade	9.Same
SQFT (Footprint) **1040**		
Condition **4 Average**		
1.Poor	4.Avg	7.V G
2.Fair	5.Avg+	8.Exc
3.Avg-	6.Good	9.Same
Phys. % Good **0%**		
Funct. % Good **100%**		
Functional Code **9 None**		
1.Incomp	4.Delap	7.No Power
2.O-Built	5.Bsmt	8.LongTerm
3.Damage	6.Common	9.None
Econ. % Good **100%**		
Economic Code **None**		
0.None	3.No Power	9.None
1.Location	4.Generate	8.
2.Encroach	5.Multi-Fa	9.
Entrance Code **5 Estimated**		
1.Interior	4.Vacant	7.
2.Refusal	5.Estimate	8.
3.Informed	6.Existing	9.
Information Code **5 Estimate**		
1.Owner	4.Agent	7.Vacant
2.Relative	5.Estimate	8.
3.Tenant	6.Other	9.

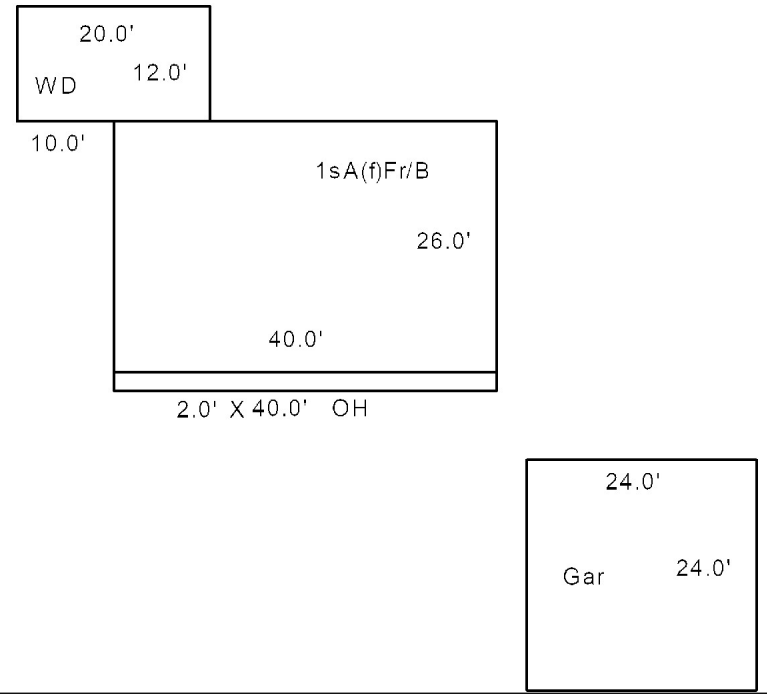

Date Inspected 10/10/2018

Additions, Outbuildings & Improvements

Type	Year	Units	Grade	Cond	Phys.	Funct.	Sound Value
26 1SFr Overhang	0	80	0 0	0	0 %	0 %	
68 Wood Deck/s	0	240	0 0	0	0 %	0 %	
23 Frame Garage	1980	576	3 100	4	0 %	100 %	
					%	%	
					%	%	
					%	%	
					%	%	
					%	%	
					%	%	
					%	%	

1.One Story Fram
2.Two Story Fram
3.Three Story Fr
4.1 & 1/2 Story
5.1 & 3/4 Story
6.2 & 1/2 Story
21.Open Frame Por
22.Encl Frame Por
23.Frame Garage
24.Frame Shed
25.Frame Bay Wind
26.1SFr Overhang
27.Unfin Basement
28.Unfinished Att
29.Finished Attic

Map Lot R12-015 Account 1012 Location 1363 LEWISTON ROAD Card 1 Of 1 11/24/2020

SPAULDING, PAUL S
1363 LEWISTON RD
LITCHFIELD ME 04350

B4744P105 B10503P267 B13117P82

Previous Owner
TOMBERLIN CONSTRUCTION, INC
51 SUSAN LANE

WEST GARDINER ME 04345
Sale Date: 12/24/2018

Previous Owner
LAPERRIERE, SHAMUS
LAPERRIERE, SHANA
1363 LEWISTON ROAD
LITCHFIELD ME 04350
Sale Date: 9/27/2016

Previous Owner
TOMBERLIN CONSTRUCTION, INC
51 SUSAN LANE

WEST GARDINER ME 04345
Sale Date: 11/08/2010

Inspection Witnessed By:

X Date

No./Date	Description	Date Insp.

Notes:

Property Data

Neighborhood **113 Lewiston Road**

Tree Growth Year **0**

X Coordinate **0**

Y Coordinate **0**

Zone/Land Use **11 Residential**

Secondary Zone

Topography **2 Rolling**

1.Level	4.Below St	7.Res Protec
2.Rolling	5.Low	8.
3.Above St	6.Swampy	9.

Utilities **4 Drilled Well** **6 Septic System**

1.Public	4.Dr Well	7.Cesspool
2.Water	5.Dug Well	8.Lake/Pond
3.Sewer	6.Septic	9.None

Street **1 Paved**

1.Paved	4.Proposed	7.
2.Semi Imp	5.R/O/W	8.
3.Gravel	6.	9.None

0

0

Sale Data

Sale Date **12/24/2018**

Price **56,000**

Sale Type **2 Land & Buildings**

1.Land	4.MFG UNIT	7.
2.L & B	5.Other	8.
3.Building	6.	9.

Financing **1 Conventional**

1.Convent	4.Seller	7.
2.FHA/VA	5.Private	8.
3.Assumed	6.Cash	9.Unknown

Validity **1 Arms Length Sale**

1.Valid	4.Split	7.Renovate
2.Related	5.Partial	8.Other
3.Distress	6.Exempt	9.

Verified **5 Public Record**

1.Buyer	4.Agent	7.Family
2.Seller	5.Pub Rec	8.Other
3.Lender	6.MLS	9.

Assessment Record

Year	Land	Buildings	Exempt	Total
2007	53,050	23,061	13,000	63,111
2008	53,050	23,061	12,350	63,761
2009	51,250	20,277	0	71,527
2010	51,250	19,120	0	70,370
2011	51,250	24,037	0	75,287
2012	51,250	24,037	10,000	65,287
2013	51,250	23,854	10,000	65,104
2014	51,250	22,156	10,000	63,406
2015	51,250	22,091	10,000	63,341
2016	51,250	21,875	15,000	58,125
2017	51,250	21,659	0	72,909
2018	51,250	21,594	0	72,844
2019	58,500	16,400	0	74,900
2020	58,500	16,400	25,000	49,900

Land Data

Front Foot	Type	Effective Frontage	Effective Depth	Influence Factor	Influence Code
11.1-100				%	
12.101-200				%	
13.201+				%	
14.				%	
15.				%	
				%	
				%	
Square Foot		**Square Feet**			
16.Regular Lot				%	
17.Secondary Lot				%	
18.Excess Land				%	
19.Condominium				%	
20.Miscellaneous				%	
				%	
				%	
Fract. Acre		**Acreage/Sites**			
21.Houselot (Frac	24	1.00	100	%	0
22.Baselot(Fract)	26	4.50	100	%	0
23.	44	1.00	100	%	0
Acres				%	
24.Houselot				%	
25.Baselot				%	
26.Rear 1				%	
27.Rear 2				%	
28.Rear 3				%	
29.Rear 4				%	

Total Acreage 5.50

Influence Codes

1.Unimproved
2.Excess Frtg
3.Topography
4.Size/Shape
5.Access
6.Restriction
7.Right of Way
8.View/Environ
9.Fract Share
Acres
30.Frontage 1
31.Frontage 2
32.Tillable
33.Tillable
34.Softwood F&O
35.Mixed Wood F&O
36.Hardwood F&O
37.Softwood TG
38.Mixed Wood TG
39.Hardwood TG
40.Wasteland
41.Gravel Pit
42.Mobile Home Si
43.Camp Site
44.Lot Improvemen
45.Access Right
46.Golf Course

Litchfield

Litchfield

Map Lot R12-015 | Account 1012 | Location 1363 LEWISTON ROAD | Card 1 Of 1 | 11/24/2020

Building Style		
0.Uncoded	4.Cape	8.Log
1.Conv.	5.Garrison	9.Other
2.Ranch	6.Split	10.Tri-Lev
3.R Ranch	7.Contemp	11.Earth O

Dwelling Units

Other Units

Stories		
1.1	4.1.5	7.1.25
2.2	5.1.75	8.3.5
3.3	6.2.5	9.4

Exterior Walls		
0.Uncoded	4.Asbestos	8.Concrete
1.Wd Clapb	5.Stucco	9.Other
2.Vinyl	6.Brick	10.Wd shin
3.Compos.	7.Stone	11.T1-11

Roof Surface		
1.Asphalt	4.Composit	7.Rolled R
2.Slate	5.Wood	8.
3.Metal	6.Other	9.

SF Masonry Trim

OPEN-3-CUSTOM

OPEN-4-CUSTOM

Year Built

Year Remodeled

Foundation		
1.Concrete	4.Wood	7.
2.C Block	5.Slab	8.
3.Br/Stone	6.Piers	9.

Basement		
1.1/4 Bmt	4.Full Bmt	7.
2.1/2 Bmt	5.Crawl Sp	8.
3.3/4 Bmt	6.	9.None

Bsmt Gar # Cars

Wet Basement		
1.Dry	4.Dirt Flr	7.
2.Damp	5.	8.
3.Wet	6.	9.

SF Bsmt Living

Fin Bsmt Grade

OPEN-5-CUSTOMIZE

Heat Type **100%**		
0.Uncoded	4.Steam	8.Fl/Wall
1.HWBB	5.FWA	9.No Heat
2.HWCI	6.GravWA	10.Radiant
3.H Pump	7.Electric	11.Radiant

Cool Type **0%**		
1.Refrig	4.W&C Air	7.RadHW
2.Evapor	5.Monitor-	8.
3.H Pump	6.Monitor-	9.None

Kitchen Style		
1.Modern	4.Obsolete	7.
2.Typical	5.	8.
3.Old Type	6.	9.None

Bath(s) Style		
1.Modern	4.Obsolete	7.
2.Typical	5.	8.
3.Old Type	6.	9.None

Rooms

Bedrooms

Full Baths

Half Baths

Addn Fixtures

Fireplaces

TRIO Software
A Division of Harris Computer Systems

Layout		
1.Typical	4.	7.
2.Inadeq	5.	8.
3.	6.	9.

Attic		
1.1/4 Fin	4.Full Fin	7.
2.1/2 Fin	5.Fl/Stair	8.
3.3/4 Fin	6.	9.None

Insulation		
1.Full	4.Minimal	7.
2.Heavy	5.Partial	8.
3.Capped	6.	9.None

Unfinished %

Grade & Factor		
1.E Grade	4.B Grade	7.AAA Grad
2.D Grade	5.A Grade	8.M&S
3.C Grade	6.AA Grade	9.Same

SQFT (Footprint)

Condition		
1.Poor	4.Avg	7.V G
2.Fair	5.Avg+	8.Exc
3.Avg-	6.Good	9.Same

Phys. % Good

Funct. % Good

Functional Code		
1.Incomp	4.Delap	7.No Power
2.O-Built	5.Bsmt	8.LongTerm
3.Damage	6.Common	9.None

Econ. % Good

Economic Code		
0.None	3.No Power	9.None
1.Location	4.Generate	8.
2.Encroach	5.Multi-Fa	9.

Entrance Code **5 Estimated**		
1.Interior	4.Vacant	7.
2.Refusal	5.Estimate	8.
3.Informed	6.Existing	9.

Information Code **5 Estimate**		
1.Owner	4.Agent	7.Vacant
2.Relative	5.Estimate	8.
3.Tenant	6.Other	9.

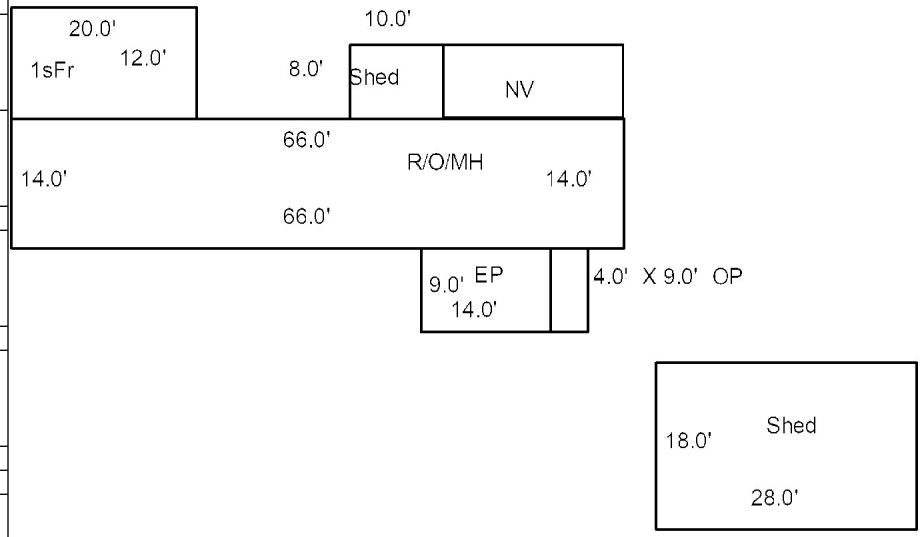

Date Inspected 10/10/2018

Additions, Outbuildings & Improvements

Type	Year	Units	Grade	Cond	Phys.	Funct.	Sound Value
827 Homette	1975	14x66	2 100	2	0 %	100 %	
100 Roof Over MH	1975	924	0 0	0	0 %	0 %	
1 One Story Frame	1995	240	0 0	0	0 %	0 %	
22 Encl Frame	0	126	0 0	0	0 %	0 %	
21 Open Frame	1995	36	0 0	0	0 %	0 %	
24 Frame Shed	0	80	2 100	9	0 %	0 %	
24 Frame Shed	0	504	1 100	2	0 %	100 %	
					%	%	
					%	%	
					%	%	

1.One Story Fram
2.Two Story Fram
3.Three Story Fr
4.1 & 1/2 Story
5.1 & 3/4 Story
6.2 & 1/2 Story
21.Open Frame Por
22.Encl Frame Por
23.Frame Garage
24.Frame Shed
25.Frame Bay Wind
26.1SFr Overhang
27.Unfin Basement
28.Unfinished Att
29.Finished Attic

Map Lot R12-017 Account 2189 Location 8 WABENAKI LANE Card 1 Of 1 11/24/2020

CRAFT DANIEL
CRAFT VERONICA
P O BOX 39
LITCHFIELD ME 04350

B13288P176

Previous Owner
CRAFT, DANIEL & VERONICA
P O BOX 39

LITCHFIELD ME 04350
Sale Date: 5/06/2004

Inspection Witnessed By:

X Date

No./Date	Description	Date Insp.

Notes:

2/12/20 W/MR HOUSE MORE DONE, ADJ FUNC 1sFr DOWN. '13 per further review and inspection with owner, house is incomplete. addition is 952 sq ft not 852 also add basement missed under 1sFrame. Many of these issues were accounted for in the field by Pat dow but were entered into the computer improperly. All of these error created an overvaluation. Abatement will be recommended.

Litchfield

Property Data

Neighborhood **218 Wabenaki Lane**

Tree Growth Year **0**

X Coordinate **0**

Y Coordinate **0**

Zone/Land Use **11 Residential**

Secondary Zone

Topography **2 Rolling**

1.Level	4.Below St	7.Res Protec
2.Rolling	5.Low	8.
3.Above St	6.Swampy	9.

Utilities **4 Drilled Well** **6 Septic System**

1.Public	4.Dr Well	7.Cesspool
2.Water	5.Dug Well	8.Lake/Pond
3.Sewer	6.Septic	9.None

Street **1 Paved**

1.Paved	4.Proposed	7.
2.Semi Imp	5.R/O/W	8.
3.Gravel	6.	9.None

0

0

Sale Data

Sale Date **5/21/2001**

Price **21,000**

Sale Type **1 Land Only**

1.Land	4.MFG UNIT	7.
2.L & B	5.Other	8.
3.Building	6.	9.

Financing

1.Convent	4.Seller	7.
2.FHA/VA	5.Private	8.
3.Assumed	6.Cash	9.Unknown

Validity **2 Related Parties**

1.Valid	4.Split	7.Renovate
2.Related	5.Partial	8.Other
3.Distress	6.Exempt	9.

Verified **5 Public Record**

1.Buyer	4.Agent	7.Family
2.Seller	5.Pub Rec	8.Other
3.Lender	6.MLS	9.

Assessment Record

Year	Land	Buildings	Exempt	Total
2007	62,625	74,085	13,000	123,710
2008	62,625	74,085	12,350	124,360
2009	57,875	76,788	9,500	125,163
2010	57,875	73,317	10,000	121,192
2011	57,875	145,557	10,000	193,432
2012	57,875	145,557	10,000	193,432
2013	57,875	91,856	10,000	139,731
2014	57,875	90,843	10,000	138,718
2015	57,875	90,823	10,000	138,698
2016	57,875	89,826	15,000	132,701
2017	57,875	89,808	20,000	127,683
2018	57,875	88,794	19,200	127,469
2019	64,100	125,400	20,000	169,500
2020	64,100	139,400	25,000	178,500

Land Data

Front Foot

11.1-100
12.101-200
13.201+
14.
15.

Square Foot

16.Regular Lot
17.Secondary Lot
18.Excess Land
19.Condominium
20.Miscellaneous

Fract. Acre

21.Houselot (Frac
22.Baselot(Fract)
23.

Acres

24.Houselot
25.Baselot
26.Rear 1
27.Rear 2
28.Rear 3
29.Rear 4

Type	Effective Frontage	Effective Depth	Influence Factor	Influence Code
			%	
			%	
			%	
			%	
			%	
			%	
			%	
Square Feet				
			%	
			%	
			%	
			%	
			%	
			%	
			%	
Acreage/Sites				
24	1.00	100	%	0
26	5.00	100	%	0
27	5.50	100	%	0
44	1.00	100	%	0
			%	
			%	
			%	

Total Acreage 11.50

Influence Codes

1.Unimproved
2.Excess Frtg
3.Topography
4.Size/Shape
5.Access
6.Restriction
7.Right of Way
8.View/Environ
9.Fract Share

Acres

30.Frontage 1
31.Frontage 2
32.Tillable
33.Tillable
34.Softwood F&O
35.Mixed Wood F&O
36.Hardwood F&O
37.Softwood TG
38.Mixed Wood TG
39.Hardwood TG
40.Wasteland
41.Gravel Pit
42.Mobile Home Si
43.Camp Site
44.Lot Improvemen
45.Access Right
46.Golf Course

Litchfield

Map Lot R12-017 | Account 2189 | Location 8 WABENAKI LANE | Card 1 Of 1 | 11/24/2020

Building Style	**1 Conventional**	
0.Uncoded	4.Cape	8.Log
1.Conv.	5.Garrison	9.Other
2.Ranch	6.Split	10.Tri-Lev
3.R Ranch	7.Contemp	11.Earth O
Dwelling Units	**1**	
Other Units	**0**	
Stories	**2 Two Story**	
1.1	4.1.5	7.1.25
2.2	5.1.75	8.3.5
3.3	6.2.5	9.4
Exterior Walls	**2 Vinyl**	
0.Uncoded	4.Asbestos	8.Concrete
1.Wd Clapb	5.Stucco	9.Other
2.Vinyl	6.Brick	10.Wd shin
3.Compos.	7.Stone	11.T1-11
Roof Surface	**1 Asphalt Shingles**	
1.Asphalt	4.Composit	7.Rolled R
2.Slate	5.Wood	8.
3.Metal	6.Other	9.
SF Masonry Trim	**0**	
OPEN-3-CUSTOM	**0**	
OPEN-4-CUSTOM	**0**	
Year Built	**2002**	
Year Remodeled	**0**	
Foundation	**5 Concrete Slab**	
1.Concrete	4.Wood	7.
2.C Block	5.Slab	8.
3.Br/Stone	6.Piers	9.
Basement	**9 No Basement**	
1.1/4 Bmt	4.Full Bmt	7.
2.1/2 Bmt	5.Crawl Sp	8.
3.3/4 Bmt	6.	9.None
Bsmt Gar # Cars	**0**	
Wet Basement	**9 No Basement**	
1.Dry	4.Dirt Flr	7.
2.Damp	5.	8.
3.Wet	6.	9.

SF Bsmt Living	**0**	
Fin Bsmt Grade	**0 0**	
OPEN-5-CUSTOMIZE	**0**	
Heat Type	**100%**	**11 Radiant Heat**
0.Uncoded	4.Steam	8.Fl/Wall
1.HWBB	5.FWA	9.No Heat
2.HWCI	6.GravWA	10.Radiant
3.H Pump	7.Electric	11.Radiant
Cool Type	**0%**	**9 None**
1.Refrig	4.W&C Air	7.RadHW
2.Evapor	5.Monitor-	8.
3.H Pump	6.Monitor-	9.None
Kitchen Style	**2 Typical**	
1.Modern	4.Obsolete	7.
2.Typical	5.	8.
3.Old Type	6.	9.None
Bath(s) Style	**2 Typical Bath(s)**	
1.Modern	4.Obsolete	7.
2.Typical	5.	8.
3.Old Type	6.	9.None
# Rooms	**6**	
# Bedrooms	**3**	
# Full Baths	**2**	
# Half Baths	**0**	
# Addn Fixtures	**0**	
# Fireplaces	**0**	

TRIO Software
A Division of Harris Computer Systems

Layout	**1 Typical**	
1.Typical	4.	7.
2.Inadeq	5.	8.
3.	6.	9.
Attic	**9 None**	
1.1/4 Fin	4.Full Fin	7.
2.1/2 Fin	5.Fl/Stair	8.
3.3/4 Fin	6.	9.None
Insulation	**1 Full**	
1.Full	4.Minimal	7.
2.Heavy	5.Partial	8.
3.Capped	6.	9.None
Unfinished %	**0%**	
Grade & Factor	**2 Fair 110%**	
1.E Grade	4.B Grade	7.AAA Grad
2.D Grade	5.A Grade	8.M&S
3.C Grade	6.AA Grade	9.Same
SQFT (Footprint)	**952**	
Condition	**4 Average**	
1.Poor	4.Avg	7.V G
2.Fair	5.Avg+	8.Exc
3.Avg-	6.Good	9.Same
Phys. % Good	**0%**	
Funct. % Good	**80%**	
Functional Code	**1 Incomplete**	
1.Incomp	4.Delap	7.No Power
2.O-Built	5.Bsmt	8.LongTerm
3.Damage	6.Common	9.None
Econ. % Good	**100%**	
Economic Code	**None**	
0.None	3.No Power	9.None
1.Location	4.Generate	8.
2.Encroach	5.Multi-Fa	9.
Entrance Code	**5 Estimated**	
1.Interior	4.Vacant	7.
2.Refusal	5.Estimate	8.
3.Informed	6.Existing	9.
Information Code	**5 Estimate**	
1.Owner	4.Agent	7.Vacant
2.Relative	5.Estimate	8.
3.Tenant	6.Other	9.

Date Inspected 10/18/2018

Additions, Outbuildings & Improvements

Type	Year	Units	Grade	Cond	Phys.	Funct.	Sound Value
48 Enc.Fr.Porch Up	0	962	0 0	0	0 %	0 %	
23 Frame Garage	0	962	0 0	0	0 %	0 %	
21 Open Frame	2002	288	9 100	9	0 %	0 %	
1 One Story Frame	2002	144	9 100	9	0 %	40 %	
24 Frame Shed	2002				%	%	1,000
24 Frame Shed	2002				%	%	800
					%	%	
					%	%	
					%	%	
					%	%	

1.One Story Fram
2.Two Story Fram
3.Three Story Fr
4.1 & 1/2 Story
5.1 & 3/4 Story
6.2 & 1/2 Story
21.Open Frame Por
22.Encl Frame Por
23.Frame Garage
24.Frame Shed
25.Frame Bay Wind
26.1SFr Overhang
27.Unfin Basement
28.Unfinished Att
29.Finished Attic

Map Lot R12-017A | Account 2157 | Location 1396 LEWISTON ROAD | Card 1 Of 1 | 11/24/2020

HANLEY, TIMOTHY
HANLEY LYNNE
1396 LEWISTON RD
LITCHFIELD ME 04350

B6318P280

Property Data

Neighborhood **113 Lewiston Road**

Tree Growth Year **0**

X Coordinate **0**

Y Coordinate **0**

Zone/Land Use **11 Residential**

Secondary Zone

Topography **2 Rolling**

1.Level	4.Below St	7.Res Protec
2.Rolling	5.Low	8.
3.Above St	6.Swampy	9.

Utilities **4 Drilled Well** **6 Septic System**

1.Public	4.Dr Well	7.Cesspool
2.Water	5.Dug Well	8.Lake/Pond
3.Sewer	6.Septic	9.None

Street **1 Paved**

1.Paved	4.Proposed	7.
2.Semi Imp	5.R/O/W	8.
3.Gravel	6.	9.None

0

0

Sale Data

Sale Date

Price

Sale Type

1.Land	4.MFG UNIT	7.
2.L & B	5.Other	8.
3.Building	6.	9.

Financing

1.Convent	4.Seller	7.
2.FHA/VA	5.Private	8.
3.Assumed	6.Cash	9.Unknown

Validity

1.Valid	4.Split	7.Renovate
2.Related	5.Partial	8.Other
3.Distress	6.Exempt	9.

Verified

1.Buyer	4.Agent	7.Family
2.Seller	5.Pub Rec	8.Other
3.Lender	6.MLS	9.

Assessment Record

Year	Land	Buildings	Exempt	Total
2007	53,050	120,418	0	173,468
2008	53,050	120,418	0	173,468
2009	51,250	131,380	0	182,630
2010	51,250	114,148	0	165,398
2011	51,250	165,628	0	216,878
2012	51,250	165,628	0	216,878
2013	51,250	165,608	0	216,858
2014	51,250	163,856	0	215,106
2015	51,250	163,837	0	215,087
2016	51,250	162,015	0	213,265
2017	51,250	161,995	0	213,245
2018	51,250	160,243	0	211,493
2019	58,500	154,700	0	213,200
2020	58,500	154,700	25,000	188,200

Land Data

Front Foot

11.1-100
12.101-200
13.201+
14.
15.

Square Foot

16.Regular Lot
17.Secondary Lot
18.Excess Land
19.Condominium
20.Miscellaneous

Fract. Acre

21.Houselot (Frac
22.Baselot(Fract)
23.

Acres

24.Houselot
25.Baselot
26.Rear 1
27.Rear 2
28.Rear 3
29.Rear 4

Type	Effective Frontage	Effective Depth	Influence Factor	Influence Code
			%	
			%	
			%	
			%	
			%	
			%	
			%	
	Square Feet			
			%	
			%	
			%	
			%	
			%	
			%	
			%	
	Acreage/Sites			
24	1.00		100 %	0
26	4.50		100 %	0
44	1.00		100 %	0
			%	
			%	
			%	
			%	

Total Acreage 5.50

Influence Codes

1.Unimproved
2.Excess Frtg
3.Topography
4.Size/Shape
5.Access
6.Restriction
7.Right of Way
8.View/Environ
9.Fract Share

Acres

30.Frontage 1
31.Frontage 2
32.Tillable
33.Tillable
34.Softwood F&O
35.Mixed Wood F&O
36.Hardwood F&O
37.Softwood TG
38.Mixed Wood TG
39.Hardwood TG
40.Wasteland
41.Gravel Pit
42.Mobile Home Si
43.Camp Site
44.Lot Improvemen
45.Access Right
46.Golf Course

Inspection Witnessed By:

X Date

No./Date	Description	Date Insp.

Notes:

Litchfield

Litchfield

Map Lot R12-017A | Account 2157 | Location 1396 LEWISTON ROAD | Card 1 Of 1 | 11/24/2020

Building Style	**1 Conventional**	
0.Uncoded	4.Cape	8.Log
1.Conv.	5.Garrison	9.Other
2.Ranch	6.Split	10.Tri-Lev
3.R Ranch	7.Contemp	11.Earth O
Dwelling Units	**1**	
Other Units	**0**	
Stories	**4 One & 1/2 Story**	
1.1	4.1.5	7.1.25
2.2	5.1.75	8.3.5
3.3	6.2.5	9.4
Exterior Walls	**2 Vinyl**	
0.Uncoded	4.Asbestos	8.Concrete
1.Wd Clapb	5.Stucco	9.Other
2.Vinyl	6.Brick	10.Wd shin
3.Compos.	7.Stone	11.T1-11
Roof Surface	**3 Sheet Metal**	
1.Asphalt	4.Composit	7.Rolled R
2.Slate	5.Wood	8.
3.Metal	6.Other	9.
SF Masonry Trim	**0**	
OPEN-3-CUSTOM	**0**	
OPEN-4-CUSTOM	**0**	
Year Built	**2004**	
Year Remodeled	**0**	
Foundation	**1 Concrete**	
1.Concrete	4.Wood	7.
2.C Block	5.Slab	8.
3.Br/Stone	6.Piers	9.
Basement	**4 Full Basement**	
1.1/4 Bmt	4.Full Bmt	7.
2.1/2 Bmt	5.Crawl Sp	8.
3.3/4 Bmt	6.	9.None
Bsmt Gar # Cars	**0**	
Wet Basement	**1 Dry Basement**	
1.Dry	4.Dirt Flr	7.
2.Damp	5.	8.
3.Wet	6.	9.

SF Bsmt Living	**0**	
Fin Bsmt Grade	**0 0**	
OPEN-5-CUSTOMIZE	**0**	
Heat Type	**100%**	**1 Hot Water BB**
0.Uncoded	4.Steam	8.Fl/Wall
1.HWBB	5.FWA	9.No Heat
2.HWCI	6.GravWA	10.Radiant
3.H Pump	7.Electric	11.Radiant
Cool Type	**0%**	**9 None**
1.Refrig	4.W&C Air	7.RadHW
2.Evapor	5.Monitor-	8.
3.H Pump	6.Monitor-	9.None
Kitchen Style	**2 Typical**	
1.Modern	4.Obsolete	7.
2.Typical	5.	8.
3.Old Type	6.	9.None
Bath(s) Style	**2 Typical Bath(s)**	
1.Modern	4.Obsolete	7.
2.Typical	5.	8.
3.Old Type	6.	9.None
# Rooms	**5**	
# Bedrooms	**3**	
# Full Baths	**2**	
# Half Baths	**0**	
# Addn Fixtures	**0**	
# Fireplaces	**0**	

TRIO Software
A Division of Harris Computer Systems

Layout	**1 Typical**	
1.Typical	4.	7.
2.Inadeq	5.	8.
3.	6.	9.
Attic	**9 None**	
1.1/4 Fin	4.Full Fin	7.
2.1/2 Fin	5.Fl/Stair	8.
3.3/4 Fin	6.	9.None
Insulation	**1 Full**	
1.Full	4.Minimal	7.
2.Heavy	5.Partial	8.
3.Capped	6.	9.None
Unfinished %	**0%**	
Grade & Factor	**3 Average 105%**	
1.E Grade	4.B Grade	7.AAA Grad
2.D Grade	5.A Grade	8.M&S
3.C Grade	6.AA Grade	9.Same
SQFT (Footprint)	**840**	
Condition	**4 Average**	
1.Poor	4.Avg	7.V G
2.Fair	5.Avg+	8.Exc
3.Avg-	6.Good	9.Same
Phys. % Good	**0%**	
Funct. % Good	**100%**	
Functional Code	**9 None**	
1.Incomp	4.Delap	7.No Power
2.O-Built	5.Bsmt	8.LongTerm
3.Damage	6.Common	9.None
Econ. % Good	**100%**	
Economic Code	**None**	
0.None	3.No Power	9.None
1.Location	4.Generate	8.
2.Encroach	5.Multi-Fa	9.
Entrance Code	**1 Interior Inspect**	
1.Interior	4.Vacant	7.
2.Refusal	5.Estimate	8.
3.Informed	6.Existing	9.
Information Code	**1 Owner**	
1.Owner	4.Agent	7.Vacant
2.Relative	5.Estimate	8.
3.Tenant	6.Other	9.

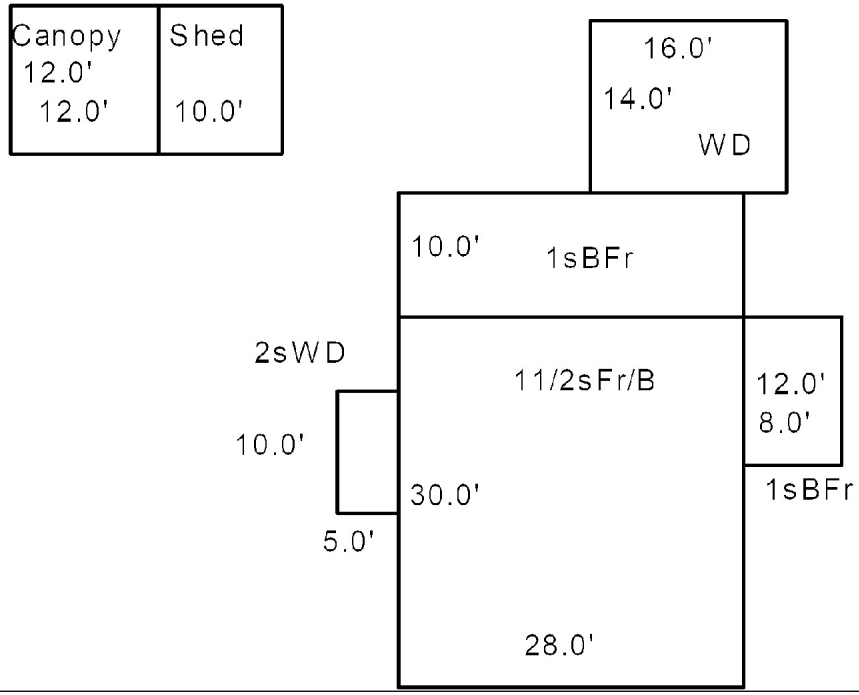

Date Inspected 10/17/2018

Additions, Outbuildings & Improvements

Type	Year	Units	Grade	Cond	Phys.	Funct.	Sound Value
38 1 Story Bsmt	0	280	0 0	0	0 %	0 %	
38 1 Story Bsmt	0	96	0 0	0	0 %	0 %	
68 Wood Deck/s	2005	224	9 100	4	0 %	100 %	
68 Wood Deck/s	2005	50	9 100	4	0 %	100 %	
24 Frame Shed	0				%	%	400
61 Canopy/s	0				%	%	200
					%	%	
					%	%	
					%	%	
					%	%	

1.One Story Fram
2.Two Story Fram
3.Three Story Fr
4.1 & 1/2 Story
5.1 & 3/4 Story
6.2 & 1/2 Story
21.Open Frame Por
22.Encl Frame Por
23.Frame Garage
24.Frame Shed
25.Frame Bay Wind
26.1SFr Overhang
27.Unfin Basement
28.Unfinished Att
29.Finished Attic

Map Lot R12-017B | Account 2442 | Location 23 WABENAKI LANE | Card 1 Of 1 | 11/24/2020

MURRAY, TINA MARIE
23 WABAENAKI LANE
LITCHFIELD ME 04350

B7953P240 B12919P249

Previous Owner
CRAFT STEPHEN
CRAFT STELLA
PO BOX 436
LITCHFIELD ME 04350
Sale Date: 5/23/2018

Inspection Witnessed By:

X Date

No./Date	Description	Date Insp.

Notes:
2/12/20 NAH ADD SHED & WD

Litchfield

Property Data

Neighborhood	**218 Wabenaki Lane**
Tree Growth Year	**0**
X Coordinate	**0**
Y Coordinate	**0**
Zone/Land Use	**11 Residential**
Secondary Zone	
Topography	**2 Rolling**

1.Level	4.Below St	7.Res Protec
2.Rolling	5.Low	8.
3.Above St	6.Swampy	9.

Utilities **4 Drilled Well** **6 Septic System**

1.Public	4.Dr Well	7.Cesspool
2.Water	5.Dug Well	8.Lake/Pond
3.Sewer	6.Septic	9.None

Street **1 Paved**

1.Paved	4.Proposed	7.
2.Semi Imp	5.R/O/W	8.
3.Gravel	6.	9.None

0
0

Sale Data

Sale Date	**5/23/2018**
Price	**199,000**
Sale Type	**2 Land & Buildings**

1.Land	4.MFG UNIT	7.
2.L & B	5.Other	8.
3.Building	6.	9.

Financing **9 Unknown**

1.Convent	4.Seller	7.
2.FHA/VA	5.Private	8.
3.Assumed	6.Cash	9.Unknown

Validity **1 Arms Length Sale**

1.Valid	4.Split	7.Renovate
2.Related	5.Partial	8.Other
3.Distress	6.Exempt	9.

Verified **5 Public Record**

1.Buyer	4.Agent	7.Family
2.Seller	5.Pub Rec	8.Other
3.Lender	6.MLS	9.

Assessment Record

Year	Land	Buildings	Exempt	Total
2007	40,087	142,348	0	182,435
2008	40,087	142,348	0	182,435
2009	40,075	168,538	9,500	199,113
2010	40,075	142,348	14,000	168,423
2011	40,075	133,587	14,000	159,662
2012	40,075	133,587	14,000	159,662
2013	40,075	133,568	14,000	159,643
2014	40,075	133,568	14,000	159,643
2015	40,075	133,549	14,000	159,624
2016	40,075	132,138	19,000	153,213
2017	40,075	132,119	24,000	148,194
2018	40,075	132,119	23,040	149,154
2019	45,100	157,000	20,000	182,100
2020	45,100	160,900	25,000	181,000

Land Data

Front Foot

11.1-100
12.101-200
13.201+
14.
15.

Square Foot

16.Regular Lot
17.Secondary Lot
18.Excess Land
19.Condominium
20.Miscellaneous

Fract. Acre

21.Houselot (Frac
22.Baselot(Fract)
23.

Acres

24.Houselot
25.Baselot
26.Rear 1
27.Rear 2
28.Rear 3
29.Rear 4

Type	Effective Frontage	Effective Depth	Influence Factor	Influence Code
			%	
			%	
			%	
			%	
			%	
			%	
			%	
	Square Feet			
			%	
			%	
			%	
			%	
			%	
			%	
			%	
	Acreage/Sites			
24	1.00		100 %	0
26	0.03		100 %	0
44	1.00		100 %	0
			%	
			%	
			%	
			%	

Total Acreage 1.03

Influence Codes

1.Unimproved
2.Excess Frtg
3.Topography
4.Size/Shape
5.Access
6.Restriction
7.Right of Way
8.View/Environ
9.Fract Share

Acres

30.Frontage 1
31.Frontage 2
32.Tillable
33.Tillable
34.Softwood F&O
35.Mixed Wood F&O
36.Hardwood F&O
37.Softwood TG
38.Mixed Wood TG
39.Hardwood TG
40.Wasteland
41.Gravel Pit
42.Mobile Home Si
43.Camp Site
44.Lot Improvemen
45.Access Right
46.Golf Course

Litchfield

Map Lot R12-017B | Account 2442 | Location 23 WABENAKI LANE | Card 1 Of 1 | 11/24/2020

Building Style **1 Conventional**		
0.Uncoded	4.Cape	8.Log
1.Conv.	5.Garrison	9.Other
2.Ranch	6.Split	10.Tri-Lev
3.R Ranch	7.Contemp	11.Earth O
Dwelling Units **1**		
Other Units **0**		
Stories **1 One Story**		
1.1	4.1.5	7.1.25
2.2	5.1.75	8.3.5
3.3	6.2.5	9.4
Exterior Walls **2 Vinyl**		
0.Uncoded	4.Asbestos	8.Concrete
1.Wd Clapb	5.Stucco	9.Other
2.Vinyl	6.Brick	10.Wd shin
3.Compos.	7.Stone	11.T1-11
Roof Surface **1 Asphalt Shingles**		
1.Asphalt	4.Composit	7.Rolled R
2.Slate	5.Wood	8.
3.Metal	6.Other	9.
SF Masonry Trim **0**		
OPEN-3-CUSTOM **0**		
OPEN-4-CUSTOM **0**		
Year Built **2005**		
Year Remodeled **0**		
Foundation **1 Concrete**		
1.Concrete	4.Wood	7.
2.C Block	5.Slab	8.
3.Br/Stone	6.Piers	9.
Basement **4 Full Basement**		
1.1/4 Bmt	4.Full Bmt	7.
2.1/2 Bmt	5.Crawl Sp	8.
3.3/4 Bmt	6.	9.None
Bsmt Gar # Cars **2**		
Wet Basement **1 Dry Basement**		
1.Dry	4.Dirt Flr	7.
2.Damp	5.	8.
3.Wet	6.	9.

SF Bsmt Living **672**		
Fin Bsmt Grade **2 100**		
OPEN-5-CUSTOMIZE **0**		
Heat Type **100%** **1 Hot Water BB**		
0.Uncoded	4.Steam	8.Fl/Wall
1.HWBB	5.FWA	9.No Heat
2.HWCI	6.GravWA	10.Radiant
3.H Pump	7.Electric	11.Radiant
Cool Type **0%** **9 None**		
1.Refrig	4.W&C Air	7.RadHW
2.Evapor	5.Monitor-	8.
3.H Pump	6.Monitor-	9.None
Kitchen Style **2 Typical**		
1.Modern	4.Obsolete	7.
2.Typical	5.	8.
3.Old Type	6.	9.None
Bath(s) Style **2 Typical Bath(s)**		
1.Modern	4.Obsolete	7.
2.Typical	5.	8.
3.Old Type	6.	9.None
# Rooms **5**		
# Bedrooms **2**		
# Full Baths **2**		
# Half Baths **0**		
# Addn Fixtures **0**		
# Fireplaces **0**		

TRIO Software
A Division of Harris Computer Systems

Layout **1 Typical**		
1.Typical	4.	7.
2.Inadeq	5.	8.
3.	6.	9.
Attic **9 None**		
1.1/4 Fin	4.Full Fin	7.
2.1/2 Fin	5.Fl/Stair	8.
3.3/4 Fin	6.	9.None
Insulation **1 Full**		
1.Full	4.Minimal	7.
2.Heavy	5.Partial	8.
3.Capped	6.	9.None
Unfinished % **0%**		
Grade & Factor **3 Average 100%**		
1.E Grade	4.B Grade	7.AAA Grad
2.D Grade	5.A Grade	8.M&S
3.C Grade	6.AA Grade	9.Same
SQFT (Footprint) **1440**		
Condition **4 Average**		
1.Poor	4.Avg	7.V G
2.Fair	5.Avg+	8.Exc
3.Avg-	6.Good	9.Same
Phys. % Good **0%**		
Funct. % Good **100%**		
Functional Code **9 None**		
1.Incomp	4.Delap	7.No Power
2.O-Built	5.Bsmt	8.LongTerm
3.Damage	6.Common	9.None
Econ. % Good **100%**		
Economic Code **None**		
0.None	3.No Power	9.None
1.Location	4.Generate	8.
2.Encroach	5.Multi-Fa	9.
Entrance Code **5 Estimated**		
1.Interior	4.Vacant	7.
2.Refusal	5.Estimate	8.
3.Informed	6.Existing	9.
Information Code **5 Estimate**		
1.Owner	4.Agent	7.Vacant
2.Relative	5.Estimate	8.
3.Tenant	6.Other	9.

Date Inspected 10/16/2018

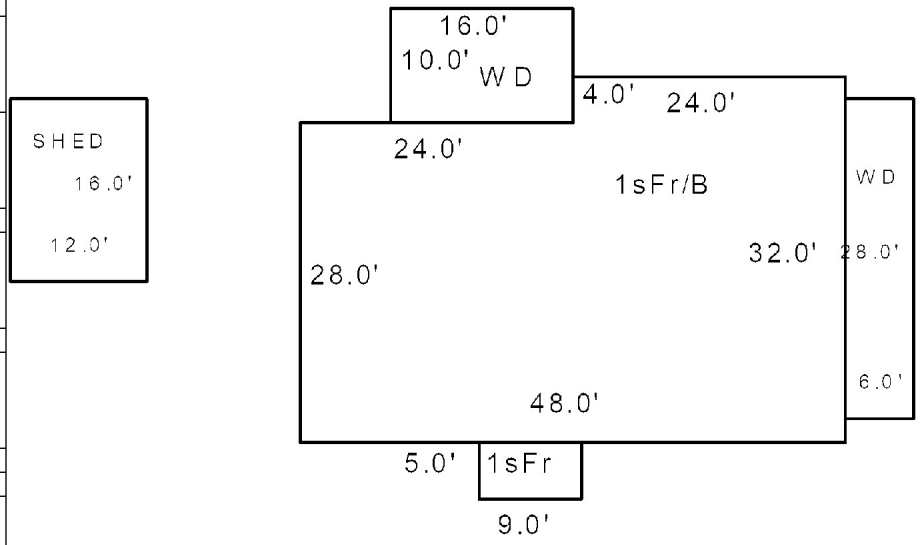

Additions, Outbuildings & Improvements

Type	Year	Units	Grade	Cond	Phys.	Funct.	Sound Value
1 One Story Frame	0	45	0 0	0	0 %	0 %	
68 Wood Deck/s	0	160	0 0	0	0 %	0 %	
68 Wood Deck/s	2019	168	3 100	4	0 %	100 %	
24 Frame Shed	2019				%	%	2,400
					%	%	
					%	%	
					%	%	
					%	%	
					%	%	
					%	%	

1.One Story Fram
2.Two Story Fram
3.Three Story Fr
4.1 & 1/2 Story
5.1 & 3/4 Story
6.2 & 1/2 Story
21.Open Frame Por
22.Encl Frame Por
23.Frame Garage
24.Frame Shed
25.Frame Bay Wind
26.1SFr Overhang
27.Unfin Basement
28.Unfinished Att
29.Finished Attic

Map Lot R12-018 Account 396 Location 1838 HALLOWELL ROAD Card 1 Of 1 11/24/2020

CUMMINGS, DAVID
116 CHESLEY DRIVE
LITCHFIELD ME 04350

B2734P285

Property Data

Neighborhood **113 Lewiston Road**

Tree Growth Year **0**

X Coordinate **0**

Y Coordinate **0**

Zone/Land Use **11 Residential**

Secondary Zone

Topography **2 Rolling**

1.Level	4.Below St	7.Res Protec
2.Rolling	5.Low	8.
3.Above St	6.Swampy	9.

Utilities **9 None** **9 None**

1.Public	4.Dr Well	7.Cesspool
2.Water	5.Dug Well	8.Lake/Pond
3.Sewer	6.Septic	9.None

Street **1 Paved**

1.Paved	4.Proposed	7.
2.Semi Imp	5.R/O/W	8.
3.Gravel	6.	9.None

0

0

Sale Data

Sale Date

Price

Sale Type

1.Land	4.MFG UNIT	7.
2.L & B	5.Other	8.
3.Building	6.	9.

Financing

1.Convent	4.Seller	7.
2.FHA/VA	5.Private	8.
3.Assumed	6.Cash	9.Unknown

Validity

1.Valid	4.Split	7.Renovate
2.Related	5.Partial	8.Other
3.Distress	6.Exempt	9.

Verified

1.Buyer	4.Agent	7.Family
2.Seller	5.Pub Rec	8.Other
3.Lender	6.MLS	9.

Assessment Record

Year	Land	Buildings	Exempt	Total
2007	2,250	0	0	2,250
2008	2,138	0	0	2,138
2009	3,534	0	0	3,534
2010	3,915	0	0	3,915
2011	3,915	0	0	3,915
2012	3,915	0	0	3,915
2013	3,960	0	0	3,960
2014	3,990	0	0	3,990
2015	4,050	0	0	4,050
2016	5,745	0	0	5,745
2017	6,060	0	0	6,060
2018	5,880	0	0	5,880
2019	5,900	0	0	5,900
2020	6,000	0	0	6,000

Land Data

Front Foot	Type	Effective Frontage	Effective Depth	Influence Factor	Influence Code
11.1-100				%	
12.101-200				%	
13.201+				%	
14.				%	
15.				%	
				%	
				%	

Square Foot		Square Feet		
16.Regular Lot			%	
17.Secondary Lot			%	
18.Excess Land			%	
19.Condominium			%	
20.Miscellaneous			%	
			%	
			%	

Fract. Acre		Acreage/Sites			
21.Houselot (Frac	38	15.00	100 %	0
22.Baselot(Fract)			%	
23.			%	
Acres			%	
24.Houselot			%	
25.Baselot			%	
26.Rear 1			%	
27.Rear 2			%	
28.Rear 3			%	
29.Rear 4			%	

Total Acreage 15.00

Influence Codes

1.Unimproved
2.Excess Frtg
3.Topography
4.Size/Shape
5.Access
6.Restriction
7.Right of Way
8.View/Environ
9.Fract Share

Acres

30.Frontage 1
31.Frontage 2
32.Tillable
33.Tillable
34.Softwood F&O
35.Mixed Wood F&O
36.Hardwood F&O
37.Softwood TG
38.Mixed Wood TG
39.Hardwood TG
40.Wasteland
41.Gravel Pit
42.Mobile Home Si
43.Camp Site
44.Lot Improvemen
45.Access Right
46.Golf Course

Inspection Witnessed By:

X Date

No./Date	Description	Date Insp.

Notes:

Litchfield

Litchfield

Map Lot R12-018 | Account 396 | Location 1838 HALLOWELL ROAD | Card 1 Of 1 | 11/24/2020

Building Style		
0.Uncoded	4.Cape	8.Log
1.Conv.	5.Garrison	9.Other
2.Ranch	6.Split	10.Tri-Lev
3.R Ranch	7.Contemp	11.Earth O

Dwelling Units

Other Units

Stories		
1.1	4.1.5	7.1.25
2.2	5.1.75	8.3.5
3.3	6.2.5	9.4

Exterior Walls		
0.Uncoded	4.Asbestos	8.Concrete
1.Wd Clapb	5.Stucco	9.Other
2.Vinyl	6.Brick	10.Wd shin
3.Compos.	7.Stone	11.T1-11

Roof Surface		
1.Asphalt	4.Composit	7.Rolled R
2.Slate	5.Wood	8.
3.Metal	6.Other	9.

SF Masonry Trim

OPEN-3-CUSTOM

OPEN-4-CUSTOM

Year Built

Year Remodeled

Foundation		
1.Concrete	4.Wood	7.
2.C Block	5.Slab	8.
3.Br/Stone	6.Piers	9.

Basement		
1.1/4 Bmt	4.Full Bmt	7.
2.1/2 Bmt	5.Crawl Sp	8.
3.3/4 Bmt	6.	9.None

Bsmt Gar # Cars

Wet Basement		
1.Dry	4.Dirt Flr	7.
2.Damp	5.	8.
3.Wet	6.	9.

SF Bsmt Living

Fin Bsmt Grade

OPEN-5-CUSTOMIZE

Heat Type **100%**		
0.Uncoded	4.Steam	8.Fl/Wall
1.HWBB	5.FWA	9.No Heat
2.HWCI	6.GravWA	10.Radiant
3.H Pump	7.Electric	11.Radiant

Cool Type **0%**		
1.Refrig	4.W&C Air	7.RadHW
2.Evapor	5.Monitor-	8.
3.H Pump	6.Monitor-	9.None

Kitchen Style		
1.Modern	4.Obsolete	7.
2.Typical	5.	8.
3.Old Type	6.	9.None

Bath(s) Style		
1.Modern	4.Obsolete	7.
2.Typical	5.	8.
3.Old Type	6.	9.None

Rooms

Bedrooms

Full Baths

Half Baths

Addn Fixtures

Fireplaces

TRIO Software
A Division of Harris Computer Systems

Layout		
1.Typical	4.	7.
2.Inadeq	5.	8.
3.	6.	9.

Attic		
1.1/4 Fin	4.Full Fin	7.
2.1/2 Fin	5.Fl/Stair	8.
3.3/4 Fin	6.	9.None

Insulation		
1.Full	4.Minimal	7.
2.Heavy	5.Partial	8.
3.Capped	6.	9.None

Unfinished %

Grade & Factor		
1.E Grade	4.B Grade	7.AAA Grad
2.D Grade	5.A Grade	8.M&S
3.C Grade	6.AA Grade	9.Same

SQFT (Footprint)

Condition		
1.Poor	4.Avg	7.V G
2.Fair	5.Avg+	8.Exc
3.Avg-	6.Good	9.Same

Phys. % Good

Funct. % Good

Functional Code		
1.Incomp	4.Delap	7.No Power
2.O-Built	5.Bsmt	8.LongTerm
3.Damage	6.Common	9.None

Econ. % Good

Economic Code		
0.None	3.No Power	9.None
1.Location	4.Generate	8.
2.Encroach	5.Multi-Fa	9.

Entrance Code **0**		
1.Interior	4.Vacant	7.
2.Refusal	5.Estimate	8.
3.Informed	6.Existing	9.

Information Code **0**		
1.Owner	4.Agent	7.Vacant
2.Relative	5.Estimate	8.
3.Tenant	6.Other	9.

Date Inspected

Additions, Outbuildings & Improvements

Type	Year	Units	Grade	Cond	Phys.	Funct.	Sound Value
					%	%	
					%	%	
					%	%	
					%	%	
					%	%	
					%	%	
					%	%	
					%	%	
					%	%	
					%	%	

1.One Story Fram
2.Two Story Fram
3.Three Story Fr
4.1 & 1/2 Story
5.1 & 3/4 Story
6.2 & 1/2 Story
21.Open Frame Por
22.Encl Frame Por
23.Frame Garage
24.Frame Shed
25.Frame Bay Wind
26.1SFr Overhang
27.Unfin Basement
28.Unfinished Att
29.Finished Attic

Map Lot R12-019A | Account 1961 | Location 1458 LEWISTON ROAD | Card 1 Of 1 | 11/24/2020

LANE, ROSE
1458 LEWISTON ROAD
LITCHFIELD ME 04350

B4990P141 B9905P144

Previous Owner
LANE, MARK HEIRS OF:
1458 LEWISTON ROAD

LITCHFIELD ME 04350
Sale Date: 8/20/2008

Inspection Witnessed By:

X Date

No./Date	Description	Date Insp.

Notes:

Litchfield

Property Data

Neighborhood **113 Lewiston Road**

Tree Growth Year **0**

X Coordinate **0**

Y Coordinate **0**

Zone/Land Use **11 Residential**

Secondary Zone

Topography **2 Rolling**

1.Level	4.Below St	7.Res Protec
2.Rolling	5.Low	8.
3.Above St	6.Swampy	9.

Utilities **4 Drilled Well** **6 Septic System**

1.Public	4.Dr Well	7.Cesspool
2.Water	5.Dug Well	8.Lake/Pond
3.Sewer	6.Septic	9.None

Street **1 Paved**

1.Paved	4.Proposed	7.
2.Semi Imp	5.R/O/W	8.
3.Gravel	6.	9.None

0

0

Sale Data

Sale Date **11/10/2008**

Price

Sale Type **1 Land Only**

1.Land	4.MFG UNIT	7.
2.L & B	5.Other	8.
3.Building	6.	9.

Financing **8 .....**

1.Convent	4.Seller	7.
2.FHA/VA	5.Private	8.
3.Assumed	6.Cash	9.Unknown

Validity **1 Arms Length Sale**

1.Valid	4.Split	7.Renovate
2.Related	5.Partial	8.Other
3.Distress	6.Exempt	9.

Verified **5 Public Record**

1.Buyer	4.Agent	7.Family
2.Seller	5.Pub Rec	8.Other
3.Lender	6.MLS	9.

Assessment Record

Year	Land	Buildings	Exempt	Total
2007	42,900	114,515	0	157,415
2008	43,016	114,515	0	157,531
2009	42,600	111,221	0	153,821
2010	42,600	98,471	0	141,071
2011	42,600	106,665	0	149,265
2012	42,600	106,665	0	149,265
2013	42,600	106,498	0	149,098
2014	42,600	76,927	0	119,527
2015	42,600	75,941	0	118,541
2016	42,600	74,747	0	117,347
2017	42,600	74,580	0	117,180
2018	42,600	74,496	0	117,096
2019	48,100	56,200	0	104,300
2020	48,100	56,200	0	104,300

Land Data

Front Foot	Type	Effective Frontage	Effective Depth	Influence Factor	Influence Code
11.1-100				%	
12.101-200				%	
13.201+				%	
14.				%	
15.				%	
				%	
				%	

Square Foot		Square Feet		
16.Regular Lot			%	
17.Secondary Lot			%	
18.Excess Land			%	
19.Condominium			%	
20.Miscellaneous			%	
			%	
			%	

Fract. Acre	Acreage/Sites			
21.Houselot (Frac	24	1.00	100 %	0
22.Baselot(Fract)	26	1.04	100 %	0
23.	44	1.00	100 %	0
Acres			%	
24.Houselot			%	
25.Baselot			%	
26.Rear 1			%	
27.Rear 2			%	
28.Rear 3				
29.Rear 4				

Total Acreage 2.04

Influence Codes

1.Unimproved
2.Excess Frtg
3.Topography
4.Size/Shape
5.Access
6.Restriction
7.Right of Way
8.View/Environ
9.Fract Share
Acres
30.Frontage 1
31.Frontage 2
32.Tillable
33.Tillable
34.Softwood F&O
35.Mixed Wood F&O
36.Hardwood F&O
37.Softwood TG
38.Mixed Wood TG
39.Hardwood TG
40.Wasteland
41.Gravel Pit
42.Mobile Home Si
43.Camp Site
44.Lot Improvemen
45.Access Right
46.Golf Course

Litchfield

Map Lot R12-019A | Account 1961 | Location 1458 LEWISTON ROAD | Card 1 Of 1 | 11/24/2020

Building Style		
0.Uncoded	4.Cape	8.Log
1.Conv.	5.Garrison	9.Other
2.Ranch	6.Split	10.Tri-Lev
3.R Ranch	7.Contemp	11.Earth O

Dwelling Units

Other Units

Stories		
1.1	4.1.5	7.1.25
2.2	5.1.75	8.3.5
3.3	6.2.5	9.4

Exterior Walls		
0.Uncoded	4.Asbestos	8.Concrete
1.Wd Clapb	5.Stucco	9.Other
2.Vinyl	6.Brick	10.Wd shin
3.Compos.	7.Stone	11.T1-11

Roof Surface		
1.Asphalt	4.Composit	7.Rolled R
2.Slate	5.Wood	8.
3.Metal	6.Other	9.

SF Masonry Trim

OPEN-3-CUSTOM

OPEN-4-CUSTOM

Year Built

Year Remodeled

Foundation		
1.Concrete	4.Wood	7.
2.C Block	5.Slab	8.
3.Br/Stone	6.Piers	9.

Basement		
1.1/4 Bmt	4.Full Bmt	7.
2.1/2 Bmt	5.Crawl Sp	8.
3.3/4 Bmt	6.	9.None

Bsmt Gar # Cars

Wet Basement		
1.Dry	4.Dirt Flr	7.
2.Damp	5.	8.
3.Wet	6.	9.

SF Bsmt Living

Fin Bsmt Grade

OPEN-5-CUSTOMIZE

Heat Type **100%**		
0.Uncoded	4.Steam	8.Fl/Wall
1.HWBB	5.FWA	9.No Heat
2.HWCI	6.GravWA	10.Radiant
3.H Pump	7.Electric	11.Radiant

Cool Type **0%**		
1.Refrig	4.W&C Air	7.RadHW
2.Evapor	5.Monitor-	8.
3.H Pump	6.Monitor-	9.None

Kitchen Style		
1.Modern	4.Obsolete	7.
2.Typical	5.	8.
3.Old Type	6.	9.None

Bath(s) Style		
1.Modern	4.Obsolete	7.
2.Typical	5.	8.
3.Old Type	6.	9.None

Rooms

Bedrooms

Full Baths

Half Baths

Addn Fixtures

Fireplaces

TRIO Software
A Division of Harris Computer Systems

Layout		
1.Typical	4.	7.
2.Inadeq	5.	8.
3.	6.	9.

Attic		
1.1/4 Fin	4.Full Fin	7.
2.1/2 Fin	5.Fl/Stair	8.
3.3/4 Fin	6.	9.None

Insulation		
1.Full	4.Minimal	7.
2.Heavy	5.Partial	8.
3.Capped	6.	9.None

Unfinished %

Grade & Factor		
1.E Grade	4.B Grade	7.AAA Grad
2.D Grade	5.A Grade	8.M&S
3.C Grade	6.AA Grade	9.Same

SQFT (Footprint)

Condition		
1.Poor	4.Avg	7.V G
2.Fair	5.Avg+	8.Exc
3.Avg-	6.Good	9.Same

Phys. % Good

Funct. % Good

Functional Code		
1.Incomp	4.Delap	7.No Power
2.O-Built	5.Bsmt	8.LongTerm
3.Damage	6.Common	9.None

Econ. % Good

Economic Code		
0.None	3.No Power	9.None
1.Location	4.Generate	8.
2.Encroach	5.Multi-Fa	9.

Entrance Code **5 Estimated**		
1.Interior	4.Vacant	7.
2.Refusal	5.Estimate	8.
3.Informed	6.Existing	9.

Information Code **5 Estimate**		
1.Owner	4.Agent	7.Vacant
2.Relative	5.Estimate	8.
3.Tenant	6.Other	9.

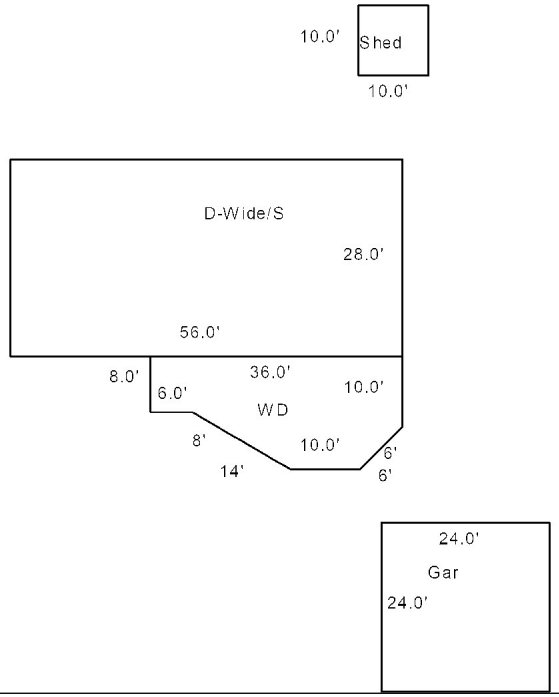

Date Inspected 10/16/2018

Additions, Outbuildings & Improvements

Type	Year	Units	Grade	Cond	Phys.	Funct.	Sound Value
991 Double wide	1996	28x56	3 100	5	0 %	100 %	
101 Conc Slab	1996	1568	3 100	4	0 %	100 %	
68 Wood Deck/s	2001	454	3 100	3	0 %	100 %	
23 Frame Garage	2007	576	3 100	4	0 %	100 %	
24 Frame Shed	0				%	%	200
					%	%	
					%	%	
					%	%	
					%	%	
					%	%	

1.One Story Fram
2.Two Story Fram
3.Three Story Fr
4.1 & 1/2 Story
5.1 & 3/4 Story
6.2 & 1/2 Story
21.Open Frame Por
22.Encl Frame Por
23.Frame Garage
24.Frame Shed
25.Frame Bay Wind
26.1SFr Overhang
27.Unfin Basement
28.Unfinished Att
29.Finished Attic

Map Lot R12-019B | Account 1988 | Location 17 HIDEAWAY LANE | Card 1 Of 1 | 11/24/2020

LANE JARED
LANE JENNIFER
17 HIDEAWAY LANE
LITCHFIELD ME 04350

B5076P149

Previous Owner
LANE, RICHARD
17 HIDEAWAY LANE

LITCHFIELD ME 04350
Sale Date: 6/09/2008

Inspection Witnessed By:

X Date

No./Date	Description	Date Insp.

Notes:

04/20/2017 W/ Mr new igp and patio.
'15 Nah add new garage.
9/23/10-PEPRMIT-10-087-SFR
4/28/11-PERMIT #11-019,SHED, DECK, RENOVATIONS

Litchfield

Property Data

Neighborhood **89 Hideaway Lane**

Tree Growth Year **0**

X Coordinate **0**

Y Coordinate **0**

Zone/Land Use **11 Residential**

Secondary Zone

Topography **2 Rolling**

1.Level	4.Below St	7.Res Protec
2.Rolling	5.Low	8.
3.Above St	6.Swampy	9.

Utilities **4 Drilled Well** **6 Septic System**

1.Public	4.Dr Well	7.Cesspool
2.Water	5.Dug Well	8.Lake/Pond
3.Sewer	6.Septic	9.None

Street **1 Paved**

1.Paved	4.Proposed	7.
2.Semi Imp	5.R/O/W	8.
3.Gravel	6.	9.None

0

0

Sale Data

Sale Date **6/09/2008**

Price

Sale Type **1 Land Only**

1.Land	4.MFG UNIT	7.
2.L & B	5.Other	8.
3.Building	6.	9.

Financing **9 Unknown**

1.Convent	4.Seller	7.
2.FHA/VA	5.Private	8.
3.Assumed	6.Cash	9.Unknown

Validity **2 Related Parties**

1.Valid	4.Split	7.Renovate
2.Related	5.Partial	8.Other
3.Distress	6.Exempt	9.

Verified **5 Public Record**

1.Buyer	4.Agent	7.Family
2.Seller	5.Pub Rec	8.Other
3.Lender	6.MLS	9.

Assessment Record

Year	Land	Buildings	Exempt	Total
2007	30,233	0	0	30,233
2008	30,262	0	0	30,262
2009	41,950	98,654	0	140,604
2010	41,950	80,980	0	122,930
2011	42,000	89,849	0	131,849
2012	42,000	89,849	0	131,849
2013	42,000	89,739	0	131,739
2014	42,000	88,885	0	130,885
2015	42,000	106,460	0	148,460
2016	42,000	105,420	0	147,420
2017	42,000	136,193	0	178,193
2018	42,000	134,828	0	176,828
2019	47,400	155,500	0	202,900
2020	47,400	155,500	0	202,900

Land Data

Front Foot	Type	Effective Frontage	Effective Depth	Influence Factor	Influence Code
11.1-100				%	
12.101-200				%	
13.201+				%	
14.				%	
15.				%	
				%	
				%	
Square Foot		**Square Feet**			
16.Regular Lot				%	
17.Secondary Lot				%	
18.Excess Land				%	
19.Condominium				%	
20.Miscellaneous				%	
				%	
				%	
Fract. Acre		**Acreage/Sites**			
21.Houselot (Frac	24	1.00	100	%	0
22.Baselot(Fract)	26	0.80	100	%	0
23.	44	1.00	100	%	0
Acres				%	
24.Houselot				%	
25.Baselot				%	
26.Rear 1				%	
27.Rear 2				%	
28.Rear 3				%	
29.Rear 4				%	

Total Acreage 1.80

Influence Codes

1.Unimproved
2.Excess Frtg
3.Topography
4.Size/Shape
5.Access
6.Restriction
7.Right of Way
8.View/Environ
9.Fract Share

Acres

30.Frontage 1
31.Frontage 2
32.Tillable
33.Tillable
34.Softwood F&O
35.Mixed Wood F&O
36.Hardwood F&O
37.Softwood TG
38.Mixed Wood TG
39.Hardwood TG
40.Wasteland
41.Gravel Pit
42.Mobile Home Si
43.Camp Site
44.Lot Improvemen
45.Access Right
46.Golf Course

Litchfield

Map Lot R12-019B | Account 1988 | Location 17 HIDEAWAY LANE | Card 1 Of 1 | 11/24/2020

Building Style **2 Ranch**		
0.Uncoded	4.Cape	8.Log
1.Conv.	5.Garrison	9.Other
2.Ranch	6.Split	10.Tri-Lev
3.R Ranch	7.Contemp	11.Earth O
Dwelling Units **1**		
Other Units **0**		
Stories **1 One Story**		
1.1	4.1.5	7.1.25
2.2	5.1.75	8.3.5
3.3	6.2.5	9.4
Exterior Walls **2 Vinyl**		
0.Uncoded	4.Asbestos	8.Concrete
1.Wd Clapb	5.Stucco	9.Other
2.Vinyl	6.Brick	10.Wd shin
3.Compos.	7.Stone	11.T1-11
Roof Surface **1 Asphalt Shingles**		
1.Asphalt	4.Composit	7.Rolled R
2.Slate	5.Wood	8.
3.Metal	6.Other	9.
SF Masonry Trim **0**		
OPEN-3-CUSTOM **0**		
OPEN-4-CUSTOM **0**		
Year Built **2008**		
Year Remodeled **0**		
Foundation **1 Concrete**		
1.Concrete	4.Wood	7.
2.C Block	5.Slab	8.
3.Br/Stone	6.Piers	9.
Basement **4 Full Basement**		
1.1/4 Bmt	4.Full Bmt	7.
2.1/2 Bmt	5.Crawl Sp	8.
3.3/4 Bmt	6.	9.None
Bsmt Gar # Cars **0**		
Wet Basement **1 Dry Basement**		
1.Dry	4.Dirt Flr	7.
2.Damp	5.	8.
3.Wet	6.	9.

SF Bsmt Living **0**		
Fin Bsmt Grade **0 0**		
OPEN-5-CUSTOMIZE **0**		
Heat Type **100%** **1 Hot Water BB**		
0.Uncoded	4.Steam	8.Fl/Wall
1.HWBB	5.FWA	9.No Heat
2.HWCI	6.GravWA	10.Radiant
3.H Pump	7.Electric	11.Radiant
Cool Type **0%** **9 None**		
1.Refrig	4.W&C Air	7.RadHW
2.Evapor	5.Monitor-	8.
3.H Pump	6.Monitor-	9.None
Kitchen Style **2 Typical**		
1.Modern	4.Obsolete	7.
2.Typical	5.	8.
3.Old Type	6.	9.None
Bath(s) Style **2 Typical Bath(s)**		
1.Modern	4.Obsolete	7.
2.Typical	5.	8.
3.Old Type	6.	9.None
# Rooms **4**		
# Bedrooms **3**		
# Full Baths **2**		
# Half Baths **0**		
# Addn Fixtures **0**		
# Fireplaces **0**		

TRIO Software
A Division of Harris Computer Systems

Layout **1 Typical**		
1.Typical	4.	7.
2.Inadeq	5.	8.
3.	6.	9.
Attic **9 None**		
1.1/4 Fin	4.Full Fin	7.
2.1/2 Fin	5.Fl/Stair	8.
3.3/4 Fin	6.	9.None
Insulation **1 Full**		
1.Full	4.Minimal	7.
2.Heavy	5.Partial	8.
3.Capped	6.	9.None
Unfinished % **0%**		
Grade & Factor **3 Average 100%**		
1.E Grade	4.B Grade	7.AAA Grad
2.D Grade	5.A Grade	8.M&S
3.C Grade	6.AA Grade	9.Same
SQFT (Footprint) **1144**		
Condition **4 Average**		
1.Poor	4.Avg	7.V G
2.Fair	5.Avg+	8.Exc
3.Avg-	6.Good	9.Same
Phys. % Good **0%**		
Funct. % Good **100%**		
Functional Code **9 None**		
1.Incomp	4.Delap	7.No Power
2.O-Built	5.Bsmt	8.LongTerm
3.Damage	6.Common	9.None
Econ. % Good **100%**		
Economic Code **None**		
0.None	3.No Power	9.None
1.Location	4.Generate	8.
2.Encroach	5.Multi-Fa	9.
Entrance Code **5 Estimated**		
1.Interior	4.Vacant	7.
2.Refusal	5.Estimate	8.
3.Informed	6.Existing	9.
Information Code **5 Estimate**		
1.Owner	4.Agent	7.Vacant
2.Relative	5.Estimate	8.
3.Tenant	6.Other	9.

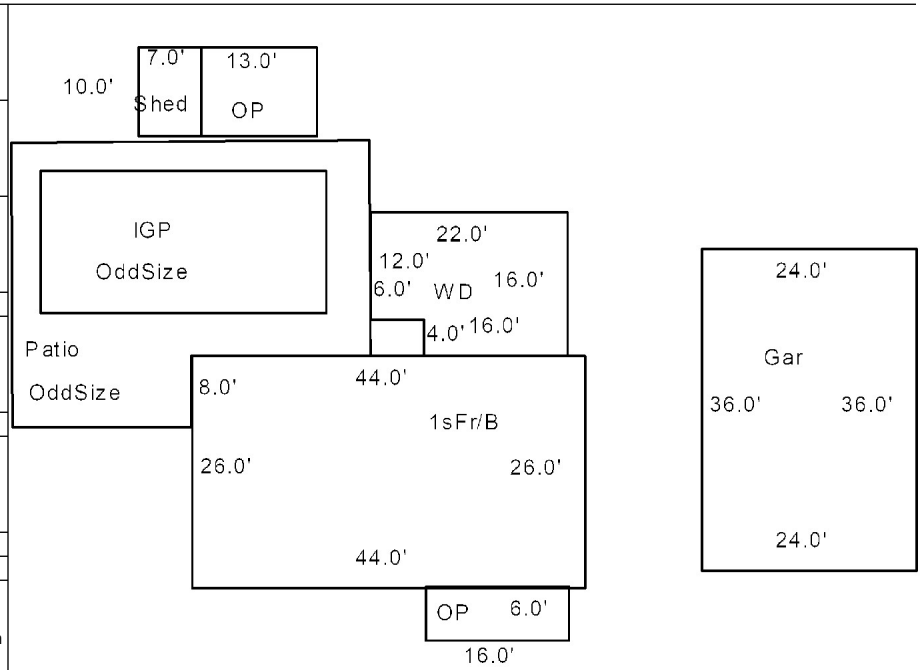

Date Inspected 10/16/2018

Additions, Outbuildings & Improvements

Type	Year	Units	Grade	Cond	Phys.	Funct.	Sound Value
68 Wood Deck/s	0	328	0 0	0	0 %	0 %	
60 Patio	2016	611	3 100	4	0 %	100 %	
63 Pool IG	2016	512	3 100	3	0 %	50 %	
23 Frame Garage	2014	864	3 100	4	0 %	100 %	
24 Frame Shed	2017				%	%	2,500
21 Open Frame	2017	130	2 100	4	0 %	100 %	
21 Open Frame	2018	96	3 100	4	0 %	100 %	
					%	%	
					%	%	
					%	%	

1.One Story Fram
2.Two Story Fram
3.Three Story Fr
4.1 & 1/2 Story
5.1 & 3/4 Story
6.2 & 1/2 Story
21.Open Frame Por
22.Encl Frame Por
23.Frame Garage
24.Frame Shed
25.Frame Bay Wind
26.1SFr Overhang
27.Unfin Basement
28.Unfinished Att
29.Finished Attic

Map Lot R12-019C | Account 2315 | Location 1 HIDEAWAY LANE | Card 1 Of 1 | 11/24/2020

CHASE, BETSY LYNN
1 HIDEAWAY LANE
LITCHFIELD ME 04350

B7071P218 B10343P228

Previous Owner
CHASE, CHRISTOPHER
CHASE BETSY
1 HIDEAWAY LANE
LITCHFIELD ME 04350
Sale Date: 2/17/2010

Inspection Witnessed By:

X Date

No./Date	Description	Date Insp.

Notes:
'14 add 24x24 "D" Garage

Property Data

Neighborhood **89 Hideaway Lane**

Tree Growth Year **0**

X Coordinate **0**

Y Coordinate **0**

Zone/Land Use **11 Residential**

Secondary Zone

Topography **2 Rolling**

1.Level	4.Below St	7.Res Protec
2.Rolling	5.Low	8.
3.Above St	6.Swampy	9.

Utilities **4 Drilled Well** **6 Septic System**

1.Public	4.Dr Well	7.Cesspool
2.Water	5.Dug Well	8.Lake/Pond
3.Sewer	6.Septic	9.None

Street **1 Paved**

1.Paved	4.Proposed	7.
2.Semi Imp	5.R/O/W	8.
3.Gravel	6.	9.None

0

0

Sale Data

Sale Date **2/17/2010**

Price **135,000**

Sale Type **2 Land & Buildings**

1.Land	4.MFG UNIT	7.
2.L & B	5.Other	8.
3.Building	6.	9.

Financing **9 Unknown**

1.Convent	4.Seller	7.
2.FHA/VA	5.Private	8.
3.Assumed	6.Cash	9.Unknown

Validity **3 Distressed Sale**

1.Valid	4.Split	7.Renovate
2.Related	5.Partial	8.Other
3.Distress	6.Exempt	9.

Verified **5 Public Record**

1.Buyer	4.Agent	7.Family
2.Seller	5.Pub Rec	8.Other
3.Lender	6.MLS	9.

Assessment Record

Year	Land	Buildings	Exempt	Total
2007	40,667	96,337	13,000	124,004
2008	40,667	95,301	12,350	123,618
2009	40,575	106,322	9,500	137,397
2010	40,575	94,265	10,000	124,840
2011	40,575	97,740	10,000	128,315
2012	40,575	97,740	10,000	128,315
2013	40,575	96,667	10,000	127,242
2014	40,575	83,634	10,000	114,209
2015	40,575	81,953	10,000	112,528
2016	40,575	80,451	15,000	106,026
2017	40,575	78,856	20,000	99,431
2018	40,575	77,429	19,200	98,804
2019	45,700	80,100	20,000	105,800
2020	45,700	78,700	25,000	99,400

Land Data

Front Foot	Type	Effective Frontage	Effective Depth	Influence Factor	Influence Code
11.1-100				%	
12.101-200				%	
13.201+				%	
14.				%	
15.				%	
				%	
				%	
Square Foot		**Square Feet**			
16.Regular Lot				%	
17.Secondary Lot				%	
18.Excess Land				%	
19.Condominium				%	
20.Miscellaneous				%	
				%	
				%	
Fract. Acre		**Acreage/Sites**			
21.Houselot (Frac	24	1.00	100	%	0
22.Baselot(Fract)	26	0.23	100	%	0
23.	44	1.00	100	%	0
Acres				%	
24.Houselot				%	
25.Baselot				%	
26.Rear 1				%	
27.Rear 2				%	
28.Rear 3				%	
29.Rear 4				%	

Total Acreage 1.23

Influence Codes

1.Unimproved
2.Excess Frtg
3.Topography
4.Size/Shape
5.Access
6.Restriction
7.Right of Way
8.View/Environ
9.Fract Share

Acres

30.Frontage 1
31.Frontage 2
32.Tillable
33.Tillable
34.Softwood F&O
35.Mixed Wood F&O
36.Hardwood F&O
37.Softwood TG
38.Mixed Wood TG
39.Hardwood TG
40.Wasteland
41.Gravel Pit
42.Mobile Home Si
43.Camp Site
44.Lot Improvemen
45.Access Right
46.Golf Course

Litchfield

Litchfield

Map Lot R12-019C | Account 2315 | Location 1 HIDEAWAY LANE | Card 1 Of 1 | 11/24/2020

Building Style		
0.Uncoded	4.Cape	8.Log
1.Conv.	5.Garrison	9.Other
2.Ranch	6.Split	10.Tri-Lev
3.R Ranch	7.Contemp	11.Earth O

Dwelling Units

Other Units

Stories		
1.1	4.1.5	7.1.25
2.2	5.1.75	8.3.5
3.3	6.2.5	9.4

Exterior Walls		
0.Uncoded	4.Asbestos	8.Concrete
1.Wd Clapb	5.Stucco	9.Other
2.Vinyl	6.Brick	10.Wd shin
3.Compos.	7.Stone	11.T1-11

Roof Surface		
1.Asphalt	4.Composit	7.Rolled R
2.Slate	5.Wood	8.
3.Metal	6.Other	9.

SF Masonry Trim

OPEN-3-CUSTOM

OPEN-4-CUSTOM

Year Built

Year Remodeled

Foundation		
1.Concrete	4.Wood	7.
2.C Block	5.Slab	8.
3.Br/Stone	6.Piers	9.

Basement		
1.1/4 Bmt	4.Full Bmt	7.
2.1/2 Bmt	5.Crawl Sp	8.
3.3/4 Bmt	6.	9.None

Bsmt Gar # Cars

Wet Basement		
1.Dry	4.Dirt Flr	7.
2.Damp	5.	8.
3.Wet	6.	9.

SF Bsmt Living

Fin Bsmt Grade

OPEN-5-CUSTOMIZE

Heat Type **100%**		
0.Uncoded	4.Steam	8.Fl/Wall
1.HWBB	5.FWA	9.No Heat
2.HWCI	6.GravWA	10.Radiant
3.H Pump	7.Electric	11.Radiant

Cool Type **0%**		
1.Refrig	4.W&C Air	7.RadHW
2.Evapor	5.Monitor-	8.
3.H Pump	6.Monitor-	9.None

Kitchen Style		
1.Modern	4.Obsolete	7.
2.Typical	5.	8.
3.Old Type	6.	9.None

Bath(s) Style		
1.Modern	4.Obsolete	7.
2.Typical	5.	8.
3.Old Type	6.	9.None

Rooms

Bedrooms

Full Baths

Half Baths

Addn Fixtures

Fireplaces

TRIO Software
A Division of Harris Computer Systems

Layout		
1.Typical	4.	7.
2.Inadeq	5.	8.
3.	6.	9.

Attic		
1.1/4 Fin	4.Full Fin	7.
2.1/2 Fin	5.Fl/Stair	8.
3.3/4 Fin	6.	9.None

Insulation		
1.Full	4.Minimal	7.
2.Heavy	5.Partial	8.
3.Capped	6.	9.None

Unfinished %

Grade & Factor		
1.E Grade	4.B Grade	7.AAA Grad
2.D Grade	5.A Grade	8.M&S
3.C Grade	6.AA Grade	9.Same

SQFT (Footprint)

Condition		
1.Poor	4.Avg	7.V G
2.Fair	5.Avg+	8.Exc
3.Avg-	6.Good	9.Same

Phys. % Good

Funct. % Good

Functional Code		
1.Incomp	4.Delap	7.No Power
2.O-Built	5.Bsmt	8.LongTerm
3.Damage	6.Common	9.None

Econ. % Good

Economic Code		
0.None	3.No Power	9.None
1.Location	4.Generate	8.
2.Encroach	5.Multi-Fa	9.

Entrance Code **1 Interior Inspect**		
1.Interior	4.Vacant	7.
2.Refusal	5.Estimate	8.
3.Informed	6.Existing	9.

Information Code **1 Owner**		
1.Owner	4.Agent	7.Vacant
2.Relative	5.Estimate	8.
3.Tenant	6.Other	9.

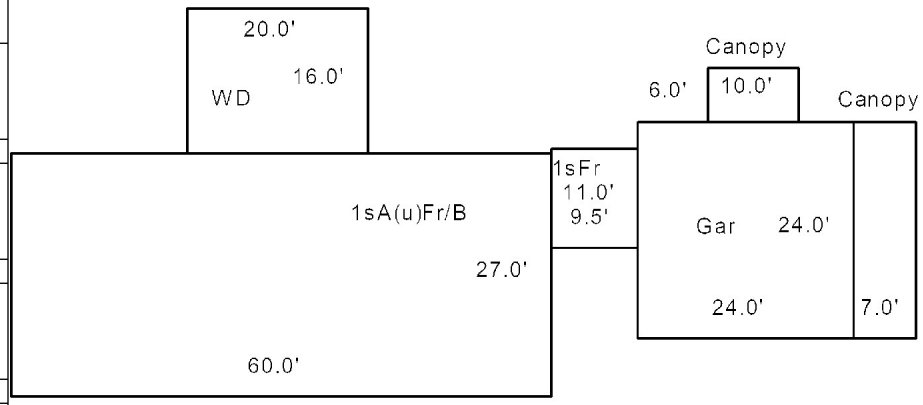

Date Inspected 10/16/2018

Additions, Outbuildings & Improvements

Type	Year	Units	Grade	Cond	Phys.	Funct.	Sound Value
1 One Story Frame	2018	104	3 100	4	0 %	100 %	
23 Frame Garage	2013	576	2 100	4	0 %	100 %	
68 Wood Deck/s	2016	320	3 100	4	0 %	100 %	
61 Canopy/s	2016	60	1 100	4	0 %	75 %	
61 Canopy/s	2016	168	1 100	4	0 %	75 %	
28 Unfinished Attic	2003	1620	3 100	4	0 %	100 %	
991 Double wide	2003	27x60	3 100	4	0 %	100 %	
27 Unfin Basement	2003	1620	3 100	4	0 %	100 %	
					%	%	
					%	%	

1.One Story Fram
2.Two Story Fram
3.Three Story Fr
4.1 & 1/2 Story
5.1 & 3/4 Story
6.2 & 1/2 Story
21.Open Frame Por
22.Encl Frame Por
23.Frame Garage
24.Frame Shed
25.Frame Bay Wind
26.1SFr Overhang
27.Unfin Basement
28.Unfinished Att
29.Finished Attic

Map Lot R12-020 Account 1754 Location LEWISTON ROAD Card 1 Of 1 11/24/2020

SEAMAN, ERIC
1844 HALLOWELL ROAD
LITCHFIELD ME 04350

B5784P236

Property Data

Neighborhood **113 Lewiston Road**

Tree Growth Year **0**

X Coordinate **0**

Y Coordinate **0**

Zone/Land Use **11 Residential**

Secondary Zone

Topography **2 Rolling**

1.Level	4.Below St	7.Res Protec
2.Rolling	5.Low	8.
3.Above St	6.Swampy	9.

Utilities **9 None** **9 None**

1.Public	4.Dr Well	7.Cesspool
2.Water	5.Dug Well	8.Lake/Pond
3.Sewer	6.Septic	9.None

Street **1 Paved**

1.Paved	4.Proposed	7.
2.Semi Imp	5.R/O/W	8.
3.Gravel	6.	9.None

0

0

Sale Data

Sale Date

Price

Sale Type **1 Land Only**

1.Land	4.MFG UNIT	7.
2.L & B	5.Other	8.
3.Building	6.	9.

Financing **9 Unknown**

1.Convent	4.Seller	7.
2.FHA/VA	5.Private	8.
3.Assumed	6.Cash	9.Unknown

Validity **1 Arms Length Sale**

1.Valid	4.Split	7.Renovate
2.Related	5.Partial	8.Other
3.Distress	6.Exempt	9.

Verified **5 Public Record**

1.Buyer	4.Agent	7.Family
2.Seller	5.Pub Rec	8.Other
3.Lender	6.MLS	9.

Assessment Record

Year	Land	Buildings	Exempt	Total
2007	56,250	0	0	56,250
2008	56,250	0	0	56,250
2009	49,250	0	0	49,250
2010	49,250	0	0	49,250
2011	49,250	0	0	49,250
2012	49,250	0	0	49,250
2013	49,250	0	0	49,250
2014	46,775	0	0	46,775
2015	46,775	0	0	46,775
2016	46,775	0	0	46,775
2017	46,775	0	0	46,775
2018	46,775	0	0	46,775
2019	41,700	0	0	41,700
2020	41,700	0	0	41,700

Land Data

Front Foot	Type	Effective Frontage	Effective Depth	Influence Factor	Influence Code
11.1-100				%	
12.101-200				%	
13.201+				%	
14.				%	
15.				%	
				%	
				%	

Square Foot		Square Feet		
16.Regular Lot			%	
17.Secondary Lot			%	
18.Excess Land			%	
19.Condominium			%	
20.Miscellaneous			%	
			%	
			%	

Fract. Acre	Acreage/Sites			
21.Houselot (Frac	25	1.00	100 %	0
22.Baselot(Fract)	26	5.00	100 %	0
23.	27	3.03	75 %	3
Acres			%	
24.Houselot			%	
25.Baselot			%	
26.Rear 1			%	
27.Rear 2			%	
28.Rear 3				
29.Rear 4				

Total Acreage 9.03

Influence Codes

1.Unimproved
2.Excess Frtg
3.Topography
4.Size/Shape
5.Access
6.Restriction
7.Right of Way
8.View/Environ
9.Fract Share
Acres
30.Frontage 1
31.Frontage 2
32.Tillable
33.Tillable
34.Softwood F&O
35.Mixed Wood F&O
36.Hardwood F&O
37.Softwood TG
38.Mixed Wood TG
39.Hardwood TG
40.Wasteland
41.Gravel Pit
42.Mobile Home Si
43.Camp Site
44.Lot Improvemen
45.Access Right
46.Golf Course

Inspection Witnessed By:

X Date

No./Date	Description	Date Insp.

Notes:

'19 3.67 ACRES TO LOT 20A
'14 3.3 ACRE TO NEW LOT 20C

Litchfield

Litchfield

Map Lot R12-020 | Account 1754 | Location LEWISTON ROAD | Card 1 Of 1 | 11/24/2020

Building Style		
0.Uncoded	4.Cape	8.Log
1.Conv.	5.Garrison	9.Other
2.Ranch	6.Split	10.Tri-Lev
3.R Ranch	7.Contemp	11.Earth O

Dwelling Units
Other Units

Stories		
1.1	4.1.5	7.1.25
2.2	5.1.75	8.3.5
3.3	6.2.5	9.4

Exterior Walls		
0.Uncoded	4.Asbestos	8.Concrete
1.Wd Clapb	5.Stucco	9.Other
2.Vinyl	6.Brick	10.Wd shin
3.Compos.	7.Stone	11.T1-11

Roof Surface		
1.Asphalt	4.Composit	7.Rolled R
2.Slate	5.Wood	8.
3.Metal	6.Other	9.

SF Masonry Trim
OPEN-3-CUSTOM
OPEN-4-CUSTOM
Year Built
Year Remodeled

Foundation		
1.Concrete	4.Wood	7.
2.C Block	5.Slab	8.
3.Br/Stone	6.Piers	9.

Basement		
1.1/4 Bmt	4.Full Bmt	7.
2.1/2 Bmt	5.Crawl Sp	8.
3.3/4 Bmt	6.	9.None

Bsmt Gar # Cars

Wet Basement		
1.Dry	4.Dirt Flr	7.
2.Damp	5.	8.
3.Wet	6.	9.

SF Bsmt Living
Fin Bsmt Grade
OPEN-5-CUSTOMIZE

Heat Type **100%**		
0.Uncoded	4.Steam	8.Fl/Wall
1.HWBB	5.FWA	9.No Heat
2.HWCI	6.GravWA	10.Radiant
3.H Pump	7.Electric	11.Radiant

Cool Type **0%**		
1.Refrig	4.W&C Air	7.RadHW
2.Evapor	5.Monitor-	8.
3.H Pump	6.Monitor-	9.None

Kitchen Style		
1.Modern	4.Obsolete	7.
2.Typical	5.	8.
3.Old Type	6.	9.None

Bath(s) Style		
1.Modern	4.Obsolete	7.
2.Typical	5.	8.
3.Old Type	6.	9.None

Rooms
Bedrooms
Full Baths
Half Baths
Addn Fixtures
Fireplaces

TRIO Software
A Division of Harris Computer Systems

Layout		
1.Typical	4.	7.
2.Inadeq	5.	8.
3.	6.	9.

Attic		
1.1/4 Fin	4.Full Fin	7.
2.1/2 Fin	5.Fl/Stair	8.
3.3/4 Fin	6.	9.None

Insulation		
1.Full	4.Minimal	7.
2.Heavy	5.Partial	8.
3.Capped	6.	9.None

Unfinished %

Grade & Factor		
1.E Grade	4.B Grade	7.AAA Grad
2.D Grade	5.A Grade	8.M&S
3.C Grade	6.AA Grade	9.Same

SQFT (Footprint)

Condition		
1.Poor	4.Avg	7.V G
2.Fair	5.Avg+	8.Exc
3.Avg-	6.Good	9.Same

Phys. % Good
Funct. % Good

Functional Code		
1.Incomp	4.Delap	7.No Power
2.O-Built	5.Bsmt	8.LongTerm
3.Damage	6.Common	9.None

Econ. % Good

Economic Code		
0.None	3.No Power	9.None
1.Location	4.Generate	8.
2.Encroach	5.Multi-Fa	9.

Entrance Code **0**		
1.Interior	4.Vacant	7.
2.Refusal	5.Estimate	8.
3.Informed	6.Existing	9.

Information Code **0**		
1.Owner	4.Agent	7.Vacant
2.Relative	5.Estimate	8.
3.Tenant	6.Other	9.

Date Inspected

Additions, Outbuildings & Improvements

Type	Year	Units	Grade	Cond	Phys.	Funct.	Sound Value
					%	%	
					%	%	
					%	%	
					%	%	
					%	%	
					%	%	
					%	%	
					%	%	
					%	%	
					%	%	

1.One Story Fram
2.Two Story Fram
3.Three Story Fr
4.1 & 1/2 Story
5.1 & 3/4 Story
6.2 & 1/2 Story
21.Open Frame Por
22.Encl Frame Por
23.Frame Garage
24.Frame Shed
25.Frame Bay Wind
26.1SFr Overhang
27.Unfin Basement
28.Unfinished Att
29.Finished Attic

Map Lot R12-020A | Account 2287 | Location 82 DENNIS HILL ROAD | Card 1 Of 1 | 11/24/2020

HERSOM ROBERT E
82 DENNIS HILL ROAD
LITCHFIELD ME 04350

B7134P282 B8682P173 B12948P1 B12948P4

Previous Owner
NEWENDYKE, CORY
213 SMALL ROAD

LITCHFIELD ME 04350
Sale Date: 11/07/2005

Previous Owner
SEAMAN, ERIC
1844 HALLOWELL ROAD

LITCHFIELD ME 04350
Sale Date: 9/27/2004

Inspection Witnessed By:

X Date

No./Date	Description	Date Insp.

Notes:

'19 3.67 ACRES FROM LOT 20 & 20B COMBINED WITH THIS LOT FOR TAX PURPOSES.

Litchfield

Property Data

Neighborhood	**54 Dennis Hill Road**		
Tree Growth Year	**0**		
X Coordinate		**0**	
Y Coordinate		**0**	
Zone/Land Use	**11 Residential**		
Secondary Zone			
Topography	**2 Rolling**		
	1.Level	4.Below St	7.Res Protec
	2.Rolling	5.Low	8.
	3.Above St	6.Swampy	9.
Utilities	**4 Drilled Well**	**6 Septic System**	
	1.Public	4.Dr Well	7.Cesspool
	2.Water	5.Dug Well	8.Lake/Pond
	3.Sewer	6.Septic	9.None
Street	**1 Paved**		
	1.Paved	4.Proposed	7.
	2.Semi Imp	5.R/O/W	8.
	3.Gravel	6.	9.None
			0
			0

Sale Data

Sale Date			**11/07/2005**
Price			**220,000**
Sale Type	**2 Land & Buildings**		
	1.Land	4.MFG UNIT	7.
	2.L & B	5.Other	8.
	3.Building	6.	9.
Financing	**9 Unknown**		
	1.Convent	4.Seller	7.
	2.FHA/VA	5.Private	8.
	3.Assumed	6.Cash	9.Unknown
Validity	**1 Arms Length Sale**		
	1.Valid	4.Split	7.Renovate
	2.Related	5.Partial	8.Other
	3.Distress	6.Exempt	9.
Verified	**5 Public Record**		
	1.Buyer	4.Agent	7.Family
	2.Seller	5.Pub Rec	8.Other
	3.Lender	6.MLS	9.

Assessment Record

Year	Land	Buildings	Exempt	Total
2007	41,740	148,498	0	190,238
2008	41,740	148,453	0	190,193
2009	41,500	172,734	0	214,234
2010	41,500	144,103	10,000	175,603
2011	41,500	112,304	10,000	143,804
2012	41,500	112,304	10,000	143,804
2013	41,500	112,259	10,000	143,759
2014	41,500	111,358	10,000	142,858
2015	41,500	111,312	10,000	142,812
2016	41,500	110,130	15,000	136,630
2017	41,500	110,085	20,000	131,585
2018	41,500	109,185	19,200	131,485
2019	58,200	157,700	20,000	195,900
2020	58,200	157,700	25,000	190,900

Land Data

Front Foot

11.1-100
12.101-200
13.201+
14.
15.

Square Foot

16.Regular Lot
17.Secondary Lot
18.Excess Land
19.Condominium
20.Miscellaneous

Fract. Acre

21.Houselot (Frac
22.Baselot(Fract)
23.

Acres

24.Houselot
25.Baselot
26.Rear 1
27.Rear 2
28.Rear 3
29.Rear 4

Type	Effective Frontage	Effective Depth	Influence Factor	Influence Code
			%	
			%	
			%	
			%	
			%	
			%	
			%	
Square Feet				
			%	
			%	
			%	
			%	
			%	
			%	
			%	
Acreage/Sites				
24	1.00	100	%	0
26	4.00	100	%	0
27	1.61	100	%	0
44	1.00	100	%	0
			%	
			%	
			%	

Total Acreage 6.61

Influence Codes

1.Unimproved
2.Excess Frtg
3.Topography
4.Size/Shape
5.Access
6.Restriction
7.Right of Way
8.View/Environ
9.Fract Share

Acres

30.Frontage 1
31.Frontage 2
32.Tillable
33.Tillable
34.Softwood F&O
35.Mixed Wood F&O
36.Hardwood F&O
37.Softwood TG
38.Mixed Wood TG
39.Hardwood TG
40.Wasteland
41.Gravel Pit
42.Mobile Home Si
43.Camp Site
44.Lot Improvemen
45.Access Right
46.Golf Course

Litchfield

Map Lot R12-020A | Account 2287 | Location 82 DENNIS HILL ROAD | Card 1 Of 1 | 11/24/2020

Building Style **2 Ranch**		
0.Uncoded	4.Cape	8.Log
1.Conv.	5.Garrison	9.Other
2.Ranch	6.Split	10.Tri-Lev
3.R Ranch	7.Contemp	11.Earth O
Dwelling Units **1**		
Other Units **0**		
Stories **1 One Story**		
1.1	4.1.5	7.1.25
2.2	5.1.75	8.3.5
3.3	6.2.5	9.4
Exterior Walls **2 Vinyl**		
0.Uncoded	4.Asbestos	8.Concrete
1.Wd Clapb	5.Stucco	9.Other
2.Vinyl	6.Brick	10.Wd shin
3.Compos.	7.Stone	11.T1-11
Roof Surface **1 Asphalt Shingles**		
1.Asphalt	4.Composit	7.Rolled R
2.Slate	5.Wood	8.
3.Metal	6.Other	9.
SF Masonry Trim **0**		
OPEN-3-CUSTOM **0**		
OPEN-4-CUSTOM **0**		
Year Built **2004**		
Year Remodeled **0**		
Foundation **1 Concrete**		
1.Concrete	4.Wood	7.
2.C Block	5.Slab	8.
3.Br/Stone	6.Piers	9.
Basement **4 Full Basement**		
1.1/4 Bmt	4.Full Bmt	7.
2.1/2 Bmt	5.Crawl Sp	8.
3.3/4 Bmt	6.	9.None
Bsmt Gar # Cars **0**		
Wet Basement **1 Dry Basement**		
1.Dry	4.Dirt Flr	7.
2.Damp	5.	8.
3.Wet	6.	9.

SF Bsmt Living **0**		
Fin Bsmt Grade **0 0**		
OPEN-5-CUSTOMIZE **0**		
Heat Type **100% 0 Uncoded**		
0.Uncoded	4.Steam	8.Fl/Wall
1.HWBB	5.FWA	9.No Heat
2.HWCI	6.GravWA	10.Radiant
3.H Pump	7.Electric	11.Radiant
Cool Type **0% 9 None**		
1.Refrig	4.W&C Air	7.RadHW
2.Evapor	5.Monitor-	8.
3.H Pump	6.Monitor-	9.None
Kitchen Style **2 Typical**		
1.Modern	4.Obsolete	7.
2.Typical	5.	8.
3.Old Type	6.	9.None
Bath(s) Style **2 Typical Bath(s)**		
1.Modern	4.Obsolete	7.
2.Typical	5.	8.
3.Old Type	6.	9.None
# Rooms **4**		
# Bedrooms **3**		
# Full Baths **2**		
# Half Baths **0**		
# Addn Fixtures **0**		
# Fireplaces **0**		

TRIO Software
A Division of Harris Computer Systems

Layout **1 Typical**		
1.Typical	4.	7.
2.Inadeq	5.	8.
3.	6.	9.
Attic **9 None**		
1.1/4 Fin	4.Full Fin	7.
2.1/2 Fin	5.Fl/Stair	8.
3.3/4 Fin	6.	9.None
Insulation **1 Full**		
1.Full	4.Minimal	7.
2.Heavy	5.Partial	8.
3.Capped	6.	9.None
Unfinished % **0%**		
Grade & Factor **3 Average 105%**		
1.E Grade	4.B Grade	7.AAA Grad
2.D Grade	5.A Grade	8.M&S
3.C Grade	6.AA Grade	9.Same
SQFT (Footprint) **1344**		
Condition **4 Average**		
1.Poor	4.Avg	7.V G
2.Fair	5.Avg+	8.Exc
3.Avg-	6.Good	9.Same
Phys. % Good **0%**		
Funct. % Good **100%**		
Functional Code **9 None**		
1.Incomp	4.Delap	7.No Power
2.O-Built	5.Bsmt	8.LongTerm
3.Damage	6.Common	9.None
Econ. % Good **100%**		
Economic Code **None**		
0.None	3.No Power	9.None
1.Location	4.Generate	8.
2.Encroach	5.Multi-Fa	9.
Entrance Code **1 Interior Inspect**		
1.Interior	4.Vacant	7.
2.Refusal	5.Estimate	8.
3.Informed	6.Existing	9.
Information Code **1 Owner**		
1.Owner	4.Agent	7.Vacant
2.Relative	5.Estimate	8.
3.Tenant	6.Other	9.

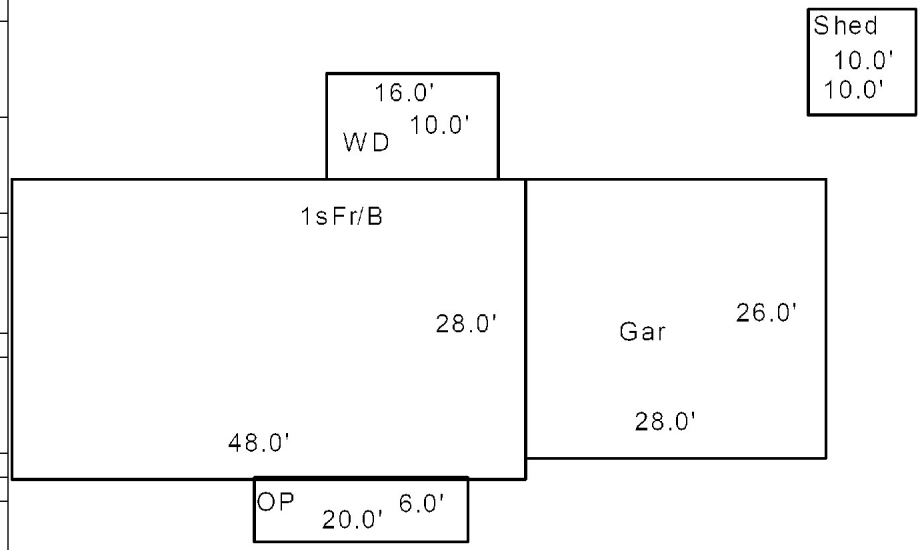

Date Inspected 10/16/2018

Additions, Outbuildings & Improvements

Type	Year	Units	Grade	Cond	Phys.	Funct.	Sound Value
23 Frame Garage	0	728	0 0	0	0 %	0 %	
21 Open Frame	0	120	0 0	0	0 %	0 %	
68 Wood Deck/s	0	160	0 0	0	0 %	0 %	
24 Frame Shed	2017				%	%	1,000
					%	%	
					%	%	
					%	%	
					%	%	
					%	%	
					%	%	

1.One Story Fram
2.Two Story Fram
3.Three Story Fr
4.1 & 1/2 Story
5.1 & 3/4 Story
6.2 & 1/2 Story
21.Open Frame Por
22.Encl Frame Por
23.Frame Garage
24.Frame Shed
25.Frame Bay Wind
26.1SFr Overhang
27.Unfin Basement
28.Unfinished Att
29.Finished Attic

Map Lot R12-020C | Account 2838 | Location 64 DENNIS HILL ROAD | Card 1 Of 1 | 11/24/2020

NAULT, JIM L
WOODRUM, MARIE
64 DENNIS HILL ROAD
LITCHFIELD ME 04350

B11537P304

Property Data

Neighborhood	**54 Dennis Hill Road**
Tree Growth Year	**0**
X Coordinate	**0**
Y Coordinate	**0**
Zone/Land Use	**11 Residential**
Secondary Zone	
Topography	**2 Rolling**

1.Level	4.Below St	7.Res Protec
2.Rolling	5.Low	8.
3.Above St	6.Swampy	9.

Utilities	**4 Drilled Well**	**6 Septic System**

1.Public	4.Dr Well	7.Cesspool
2.Water	5.Dug Well	8.Lake/Pond
3.Sewer	6.Septic	9.None

Street	**1 Paved**	

1.Paved	4.Proposed	7.
2.Semi Imp	5.R/O/W	8.
3.Gravel	6.	9.None

0
0

Sale Data

Sale Date	**10/09/2013**
Price	**19,500**
Sale Type	**1 Land Only**

1.Land	4.MFG UNIT	7.
2.L & B	5.Other	8.
3.Building	6.	9.

Financing	**9 Unknown**	

1.Convent	4.Seller	7.
2.FHA/VA	5.Private	8.
3.Assumed	6.Cash	9.Unknown

Validity	**8 Other Non Valid**	

1.Valid	4.Split	7.Renovate
2.Related	5.Partial	8.Other
3.Distress	6.Exempt	9.

Verified	**5 Public Record**	

1.Buyer	4.Agent	7.Family
2.Seller	5.Pub Rec	8.Other
3.Lender	6.MLS	9.

Assessment Record

Year	Land	Buildings	Exempt	Total
2014	33,750	0	0	33,750
2015	33,750	0	0	33,750
2016	33,750	0	0	33,750
2017	45,750	95,257	0	141,007
2018	45,750	94,258	19,200	120,808
2019	51,900	172,700	20,000	204,600
2020	51,900	172,700	25,000	199,600

Land Data

Front Foot	Type	Effective Frontage	Effective Depth	Influence Factor	Influence Code
11.1-100				%	
12.101-200				%	
13.201+				%	
14.				%	
15.				%	
				%	
				%	

Square Foot		Square Feet		
16.Regular Lot			%	
17.Secondary Lot			%	
18.Excess Land			%	
19.Condominium			%	
20.Miscellaneous			%	
			%	
			%	

Fract. Acre	Acreage/Sites				
21.Houselot (Frac	24	1.00	100	%	0
22.Baselot(Fract)	26	2.30	100	%	0
23.	44	1.00	100	%	0
Acres				%	
24.Houselot				%	
25.Baselot				%	
26.Rear 1				%	
27.Rear 2				%	
28.Rear 3					
29.Rear 4					

Total Acreage 3.30

Influence Codes

1.Unimproved
2.Excess Frtg
3.Topography
4.Size/Shape
5.Access
6.Restriction
7.Right of Way
8.View/Environ
9.Fract Share
Acres
30.Frontage 1
31.Frontage 2
32.Tillable
33.Tillable
34.Softwood F&O
35.Mixed Wood F&O
36.Hardwood F&O
37.Softwood TG
38.Mixed Wood TG
39.Hardwood TG
40.Wasteland
41.Gravel Pit
42.Mobile Home Si
43.Camp Site
44.Lot Improvemen
45.Access Right
46.Golf Course

Inspection Witnessed By:

X Date

No./Date	Description	Date Insp.

Notes:

5/18/18-NAH est no FBA
'14 3.3 ACRES FROM LOT 20

Litchfield

Litchfield

Map Lot R12-020C | Account 2838 | Location 64 DENNIS HILL ROAD | Card 1 Of 1 | 11/24/2020

Building Style **2 Ranch**		
0.Uncoded	4.Cape	8.Log
1.Conv.	5.Garrison	9.Other
2.Ranch	6.Split	10.Tri-Lev
3.R Ranch	7.Contemp	11.Earth O
Dwelling Units **1**		
Other Units **0**		
Stories **1 One Story**		
1.1	4.1.5	7.1.25
2.2	5.1.75	8.3.5
3.3	6.2.5	9.4
Exterior Walls **2 Vinyl**		
0.Uncoded	4.Asbestos	8.Concrete
1.Wd Clapb	5.Stucco	9.Other
2.Vinyl	6.Brick	10.Wd shin
3.Compos.	7.Stone	11.T1-11
Roof Surface **1 Asphalt Shingles**		
1.Asphalt	4.Composit	7.Rolled R
2.Slate	5.Wood	8.
3.Metal	6.Other	9.
SF Masonry Trim **0**		
OPEN-3-CUSTOM **0**		
OPEN-4-CUSTOM **0**		
Year Built **2016**		
Year Remodeled **0**		
Foundation **1 Concrete**		
1.Concrete	4.Wood	7.
2.C Block	5.Slab	8.
3.Br/Stone	6.Piers	9.
Basement **4 Full Basement**		
1.1/4 Bmt	4.Full Bmt	7.
2.1/2 Bmt	5.Crawl Sp	8.
3.3/4 Bmt	6.	9.None
Bsmt Gar # Cars **0**		
Wet Basement **1 Dry Basement**		
1.Dry	4.Dirt Flr	7.
2.Damp	5.	8.
3.Wet	6.	9.

SF Bsmt Living **0**		
Fin Bsmt Grade **0 0**		
OPEN-5-CUSTOMIZE **0**		
Heat Type **100% 5 Forced Warm Air**		
0.Uncoded	4.Steam	8.Fl/Wall
1.HWBB	5.FWA	9.No Heat
2.HWCI	6.GravWA	10.Radiant
3.H Pump	7.Electric	11.Radiant
Cool Type **0% 9 None**		
1.Refrig	4.W&C Air	7.RadHW
2.Evapor	5.Monitor-	8.
3.H Pump	6.Monitor-	9.None
Kitchen Style **2 Typical**		
1.Modern	4.Obsolete	7.
2.Typical	5.	8.
3.Old Type	6.	9.None
Bath(s) Style **2 Typical Bath(s)**		
1.Modern	4.Obsolete	7.
2.Typical	5.	8.
3.Old Type	6.	9.None
# Rooms **0**		
# Bedrooms **3**		
# Full Baths **2**		
# Half Baths **0**		
# Addn Fixtures **2**		
# Fireplaces **1**		

TRIO Software
A Division of Harris Computer Systems

Layout **1 Typical**		
1.Typical	4.	7.
2.Inadeq	5.	8.
3.	6.	9.
Attic **9 None**		
1.1/4 Fin	4.Full Fin	7.
2.1/2 Fin	5.Fl/Stair	8.
3.3/4 Fin	6.	9.None
Insulation **1 Full**		
1.Full	4.Minimal	7.
2.Heavy	5.Partial	8.
3.Capped	6.	9.None
Unfinished % **0%**		
Grade & Factor **3 Average 105%**		
1.E Grade	4.B Grade	7.AAA Grad
2.D Grade	5.A Grade	8.M&S
3.C Grade	6.AA Grade	9.Same
SQFT (Footprint) **1512**		
Condition **4 Average**		
1.Poor	4.Avg	7.V G
2.Fair	5.Avg+	8.Exc
3.Avg-	6.Good	9.Same
Phys. % Good **0%**		
Funct. % Good **100%**		
Functional Code **9 None**		
1.Incomp	4.Delap	7.No Power
2.O-Built	5.Bsmt	8.LongTerm
3.Damage	6.Common	9.None
Econ. % Good **100%**		
Economic Code **None**		
0.None	3.No Power	9.None
1.Location	4.Generate	8.
2.Encroach	5.Multi-Fa	9.
Entrance Code **1 Interior Inspect**		
1.Interior	4.Vacant	7.
2.Refusal	5.Estimate	8.
3.Informed	6.Existing	9.
Information Code **1 Owner**		
1.Owner	4.Agent	7.Vacant
2.Relative	5.Estimate	8.
3.Tenant	6.Other	9.

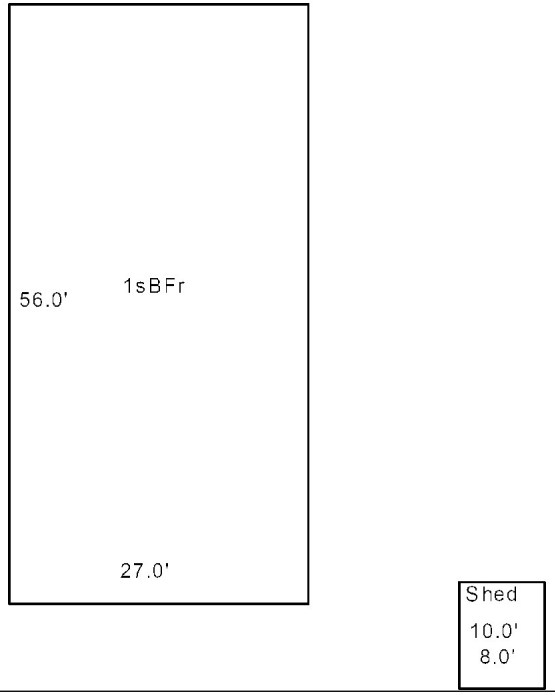

Date Inspected 10/16/2018

Additions, Outbuildings & Improvements

Type	Year	Units	Grade	Cond	Phys.	Funct.	Sound Value
24 Frame Shed	0				%	%	400
					%	%	
					%	%	
					%	%	
					%	%	
					%	%	
					%	%	
					%	%	
					%	%	
					%	%	

1.One Story Fram
2.Two Story Fram
3.Three Story Fr
4.1 & 1/2 Story
5.1 & 3/4 Story
6.2 & 1/2 Story
21.Open Frame Por
22.Encl Frame Por
23.Frame Garage
24.Frame Shed
25.Frame Bay Wind
26.1SFr Overhang
27.Unfin Basement
28.Unfinished Att
29.Finished Attic

Map Lot R12-021 Account 1666 Location WHIPPOORWILL ROAD Card 1 Of 1 11/24/2020

STANTON BIRD, CLUB
C/O: PAUL JOHNSON
276 RIDGE ROAD
MONMOUTH ME 04259

Property Data

Neighborhood **226 Whippoorwill Road**

Tree Growth Year **0**

X Coordinate **0**

Y Coordinate **0**

Zone/Land Use **11 Residential**

Secondary Zone

Topography **2 Rolling**

1.Level	4.Below St	7.Res Protec
2.Rolling	5.Low	8.
3.Above St	6.Swampy	9.

Utilities **9 None** **9 None**

1.Public	4.Dr Well	7.Cesspool
2.Water	5.Dug Well	8.Lake/Pond
3.Sewer	6.Septic	9.None

Street **1 Paved**

1.Paved	4.Proposed	7.
2.Semi Imp	5.R/O/W	8.
3.Gravel	6.	9.None

0

0

Assessment Record

Year	Land	Buildings	Exempt	Total
2007	48,500	0	48,500	0
2008	48,500	0	48,500	0
2009	44,500	0	44,500	0
2010	44,500	0	44,500	0
2011	44,500	0	44,500	0
2012	44,500	0	44,500	0
2013	44,500	0	44,500	0
2014	44,500	0	44,500	0
2015	44,500	0	44,500	0
2016	44,500	0	44,500	0
2017	44,500	0	44,500	0
2018	44,500	0	44,500	0
2019	43,000	0	43,000	0
2020	43,000	0	43,000	0

Land Data

Front Foot	Type	Effective Frontage	Effective Depth	Influence Factor	Influence Code
11.1-100				%	
12.101-200				%	
13.201+				%	
14.				%	
15.				%	
				%	
				%	
Square Foot		**Square Feet**			
16.Regular Lot				%	
17.Secondary Lot				%	
18.Excess Land				%	
19.Condominium				%	
20.Miscellaneous				%	
				%	
				%	
Fract. Acre		**Acreage/Sites**			
21.Houselot (Frac	25	1.00	100	%	0
22.Baselot(Fract)	26	5.00	100	%	0
23.	27	4.00	100	%	0
Acres				%	
24.Houselot				%	
25.Baselot				%	
26.Rear 1				%	
27.Rear 2				%	
28.Rear 3				%	
29.Rear 4				%	

Total Acreage 10.00

Influence Codes

1.Unimproved
2.Excess Frtg
3.Topography
4.Size/Shape
5.Access
6.Restriction
7.Right of Way
8.View/Environ
9.Fract Share
Acres
30.Frontage 1
31.Frontage 2
32.Tillable
33.Tillable
34.Softwood F&O
35.Mixed Wood F&O
36.Hardwood F&O
37.Softwood TG
38.Mixed Wood TG
39.Hardwood TG
40.Wasteland
41.Gravel Pit
42.Mobile Home Si
43.Camp Site
44.Lot Improvemen
45.Access Right
46.Golf Course

Inspection Witnessed By:

X Date

No./Date	Description	Date Insp.

Notes:
State of Maine legislature approved Tax exempt.

Sale Data

Sale Date

Price

Sale Type

1.Land	4.MFG UNIT	7.
2.L & B	5.Other	8.
3.Building	6.	9.

Financing

1.Convent	4.Seller	7.
2.FHA/VA	5.Private	8.
3.Assumed	6.Cash	9.Unknown

Validity

1.Valid	4.Split	7.Renovate
2.Related	5.Partial	8.Other
3.Distress	6.Exempt	9.

Verified

1.Buyer	4.Agent	7.Family
2.Seller	5.Pub Rec	8.Other
3.Lender	6.MLS	9.

Litchfield

Litchfield

Map Lot R12-021 | Account 1666 | Location WHIPPOORWILL ROAD | Card 1 Of 1 | 11/24/2020

Building Style		
0.Uncoded	4.Cape	8.Log
1.Conv.	5.Garrison	9.Other
2.Ranch	6.Split	10.Tri-Lev
3.R Ranch	7.Contemp	11.Earth O

Dwelling Units
Other Units

Stories		
1.1	4.1.5	7.1.25
2.2	5.1.75	8.3.5
3.3	6.2.5	9.4

Exterior Walls		
0.Uncoded	4.Asbestos	8.Concrete
1.Wd Clapb	5.Stucco	9.Other
2.Vinyl	6.Brick	10.Wd shin
3.Compos.	7.Stone	11.T1-11

Roof Surface		
1.Asphalt	4.Composit	7.Rolled R
2.Slate	5.Wood	8.
3.Metal	6.Other	9.

SF Masonry Trim
OPEN-3-CUSTOM
OPEN-4-CUSTOM
Year Built
Year Remodeled

Foundation		
1.Concrete	4.Wood	7.
2.C Block	5.Slab	8.
3.Br/Stone	6.Piers	9.

Basement		
1.1/4 Bmt	4.Full Bmt	7.
2.1/2 Bmt	5.Crawl Sp	8.
3.3/4 Bmt	6.	9.None

Bsmt Gar # Cars

Wet Basement		
1.Dry	4.Dirt Flr	7.
2.Damp	5.	8.
3.Wet	6.	9.

SF Bsmt Living
Fin Bsmt Grade
OPEN-5-CUSTOMIZE

Heat Type **100%**		
0.Uncoded	4.Steam	8.Fl/Wall
1.HWBB	5.FWA	9.No Heat
2.HWCI	6.GravWA	10.Radiant
3.H Pump	7.Electric	11.Radiant

Cool Type **0%**		
1.Refrig	4.W&C Air	7.RadHW
2.Evapor	5.Monitor-	8.
3.H Pump	6.Monitor-	9.None

Kitchen Style		
1.Modern	4.Obsolete	7.
2.Typical	5.	8.
3.Old Type	6.	9.None

Bath(s) Style		
1.Modern	4.Obsolete	7.
2.Typical	5.	8.
3.Old Type	6.	9.None

Rooms
Bedrooms
Full Baths
Half Baths
Addn Fixtures
Fireplaces

TRIO Software
A Division of Harris Computer Systems

Layout		
1.Typical	4.	7.
2.Inadeq	5.	8.
3.	6.	9.

Attic		
1.1/4 Fin	4.Full Fin	7.
2.1/2 Fin	5.Fl/Stair	8.
3.3/4 Fin	6.	9.None

Insulation		
1.Full	4.Minimal	7.
2.Heavy	5.Partial	8.
3.Capped	6.	9.None

Unfinished %

Grade & Factor		
1.E Grade	4.B Grade	7.AAA Grad
2.D Grade	5.A Grade	8.M&S
3.C Grade	6.AA Grade	9.Same

SQFT (Footprint)

Condition		
1.Poor	4.Avg	7.V G
2.Fair	5.Avg+	8.Exc
3.Avg-	6.Good	9.Same

Phys. % Good
Funct. % Good

Functional Code		
1.Incomp	4.Delap	7.No Power
2.O-Built	5.Bsmt	8.LongTerm
3.Damage	6.Common	9.None

Econ. % Good

Economic Code		
0.None	3.No Power	9.None
1.Location	4.Generate	8.
2.Encroach	5.Multi-Fa	9.

Entrance Code **0**		
1.Interior	4.Vacant	7.
2.Refusal	5.Estimate	8.
3.Informed	6.Existing	9.

Information Code **0**		
1.Owner	4.Agent	7.Vacant
2.Relative	5.Estimate	8.
3.Tenant	6.Other	9.

Date Inspected

Additions, Outbuildings & Improvements

Type	Year	Units	Grade	Cond	Phys.	Funct.	Sound Value
					%	%	
					%	%	
					%	%	
					%	%	
					%	%	
					%	%	
					%	%	
					%	%	
					%	%	
					%	%	

1.One Story Fram
2.Two Story Fram
3.Three Story Fr
4.1 & 1/2 Story
5.1 & 3/4 Story
6.2 & 1/2 Story
21.Open Frame Por
22.Encl Frame Por
23.Frame Garage
24.Frame Shed
25.Frame Bay Wind
26.1SFr Overhang
27.Unfin Basement
28.Unfinished Att
29.Finished Attic

Map Lot R12-022 Account 2710 Location 21 VICTORIA DRIVE Card 1 Of 1 11/24/2020

CROCKER, RYAN H.
21 VICTORIA DRIVE
LITCHFIELD ME 04350

B13455P165

Previous Owner
DUBE GLEN E
PO BOX 819

SABATTUS ME 04280
Sale Date: 1/17/2020

Inspection Witnessed By:

X Date

No./Date	Description	Date Insp.

Notes:
2/11/20 NAH, M&L NEW HSE, ADD L.I., +MVR.

Litchfield

Property Data

Neighborhood **1 Rural**

Tree Growth Year **0**

X Coordinate **0**

Y Coordinate **0**

Zone/Land Use **11 Residential**

Secondary Zone

Topography **2 Rolling**

1.Level	4.Below St	7.Res Protec
2.Rolling	5.Low	8.
3.Above St	6.Swampy	9.

Utilities **4 Drilled Well** **6 Septic System**

1.Public	4.Dr Well	7.Cesspool
2.Water	5.Dug Well	8.Lake/Pond
3.Sewer	6.Septic	9.None

Street **1 Paved**

1.Paved	4.Proposed	7.
2.Semi Imp	5.R/O/W	8.
3.Gravel	6.	9.None

0

0

Sale Data

Sale Date **1/17/2020**

Price **201,000**

Sale Type **2 Land & Buildings**

1.Land	4.MFG UNIT	7.
2.L & B	5.Other	8.
3.Building	6.	9.

Financing **9 Unknown**

1.Convent	4.Seller	7.
2.FHA/VA	5.Private	8.
3.Assumed	6.Cash	9.Unknown

Validity **1 Arms Length Sale**

1.Valid	4.Split	7.Renovate
2.Related	5.Partial	8.Other
3.Distress	6.Exempt	9.

Verified **5 Public Record**

1.Buyer	4.Agent	7.Family
2.Seller	5.Pub Rec	8.Other
3.Lender	6.MLS	9.

Assessment Record

Year	Land	Buildings	Exempt	Total
2007	64,957	0	0	64,957
2008	64,957	0	0	64,957
2009	54,365	0	0	54,365
2010	54,365	0	0	54,365
2011	54,365	0	0	54,365
2012	54,365	0	0	54,365
2013	54,365	0	0	54,365
2014	54,365	0	0	54,365
2015	54,365	0	0	54,365
2016	54,365	0	0	54,365
2017	54,365	0	0	54,365
2018	54,365	0	0	54,365
2019	49,400	0	0	49,400
2020	69,400	119,700	0	189,100

Land Data

Front Foot	Type	Effective Frontage	Effective Depth	Influence Factor	Influence Code
11.1-100				%	
12.101-200				%	
13.201+				%	
14.				%	
15.				%	
				%	
				%	
Square Foot		**Square Feet**			
16.Regular Lot				%	
17.Secondary Lot				%	
18.Excess Land				%	
19.Condominium				%	
20.Miscellaneous				%	
				%	
				%	
Fract. Acre		**Acreage/Sites**			
21.Houselot (Frac	21	1.00	100	%	0
22.Baselot(Fract)	26	5.00	100	%	0
23.	27	5.00	100	%	0
Acres	28	10.00	100	%	0
24.Houselot	29	2.73	100	%	0
25.Baselot	44	1.00	100	%	0
26.Rear 1				%	
27.Rear 2					
28.Rear 3		**Total Acreage**	23.73		
29.Rear 4					

Influence Codes

1.Unimproved
2.Excess Frtg
3.Topography
4.Size/Shape
5.Access
6.Restriction
7.Right of Way
8.View/Environ
9.Fract Share

Acres

30.Frontage 1
31.Frontage 2
32.Tillable
33.Tillable
34.Softwood F&O
35.Mixed Wood F&O
36.Hardwood F&O
37.Softwood TG
38.Mixed Wood TG
39.Hardwood TG
40.Wasteland
41.Gravel Pit
42.Mobile Home Si
43.Camp Site
44.Lot Improvemen
45.Access Right
46.Golf Course

Litchfield

Map Lot R12-022 | Account 2710 | Location 21 VICTORIA DRIVE | Card 1 Of 1 | 11/24/2020

Building Style **2 Ranch**		
0.Uncoded	4.Cape	8.Log
1.Conv.	5.Garrison	9.Other
2.Ranch	6.Split	10.Tri-Lev
3.R Ranch	7.Contemp	11.Earth O
Dwelling Units **1**		
Other Units **0**		
Stories **1 One Story**		
1.1	4.1.5	7.1.25
2.2	5.1.75	8.3.5
3.3	6.2.5	9.4
Exterior Walls **2 Vinyl**		
0.Uncoded	4.Asbestos	8.Concrete
1.Wd Clapb	5.Stucco	9.Other
2.Vinyl	6.Brick	10.Wd shin
3.Compos.	7.Stone	11.T1-11
Roof Surface **1 Asphalt Shingles**		
1.Asphalt	4.Composit	7.Rolled R
2.Slate	5.Wood	8.
3.Metal	6.Other	9.
SF Masonry Trim **0**		
OPEN-3-CUSTOM **0**		
OPEN-4-CUSTOM **0**		
Year Built **2019**		
Year Remodeled **0**		
Foundation **5 Concrete Slab**		
1.Concrete	4.Wood	7.
2.C Block	5.Slab	8.
3.Br/Stone	6.Piers	9.
Basement **9 No Basement**		
1.1/4 Bmt	4.Full Bmt	7.
2.1/2 Bmt	5.Crawl Sp	8.
3.3/4 Bmt	6.	9.None
Bsmt Gar # Cars **0**		
Wet Basement **9 No Basement**		
1.Dry	4.Dirt Flr	7.
2.Damp	5.	8.
3.Wet	6.	9.

SF Bsmt Living **0**		
Fin Bsmt Grade **0 0**		
OPEN-5-CUSTOMIZE **0**		
Heat Type **100%**	**10 Radiant Heat - 1st level**	
0.Uncoded	4.Steam	8.Fl/Wall
1.HWBB	5.FWA	9.No Heat
2.HWCI	6.GravWA	10.Radiant
3.H Pump	7.Electric	11.Radiant
Cool Type **0%**	**9 None**	
1.Refrig	4.W&C Air	7.RadHW
2.Evapor	5.Monitor-	8.
3.H Pump	6.Monitor-	9.None
Kitchen Style **2 Typical**		
1.Modern	4.Obsolete	7.
2.Typical	5.	8.
3.Old Type	6.	9.None
Bath(s) Style **2 Typical Bath(s)**		
1.Modern	4.Obsolete	7.
2.Typical	5.	8.
3.Old Type	6.	9.None
# Rooms **0**		
# Bedrooms **3**		
# Full Baths **2**		
# Half Baths **0**		
# Addn Fixtures **0**		
# Fireplaces **0**		

TRIO Software
A Division of Harris Computer Systems

Layout **1 Typical**		
1.Typical	4.	7.
2.Inadeq	5.	8.
3.	6.	9.
Attic **9 None**		
1.1/4 Fin	4.Full Fin	7.
2.1/2 Fin	5.Fl/Stair	8.
3.3/4 Fin	6.	9.None
Insulation **1 Full**		
1.Full	4.Minimal	7.
2.Heavy	5.Partial	8.
3.Capped	6.	9.None
Unfinished % **0%**		
Grade & Factor **3 Average 100%**		
1.E Grade	4.B Grade	7.AAA Grad
2.D Grade	5.A Grade	8.M&S
3.C Grade	6.AA Grade	9.Same
SQFT (Footprint) **1232**		
Condition **4 Average**		
1.Poor	4.Avg	7.V G
2.Fair	5.Avg+	8.Exc
3.Avg-	6.Good	9.Same
Phys. % Good **0%**		
Funct. % Good **100%**		
Functional Code **9 None**		
1.Incomp	4.Delap	7.No Power
2.O-Built	5.Bsmt	8.LongTerm
3.Damage	6.Common	9.None
Econ. % Good **100%**		
Economic Code **None**		
0.None	3.No Power	9.None
1.Location	4.Generate	8.
2.Encroach	5.Multi-Fa	9.
Entrance Code **0**		
1.Interior	4.Vacant	7.
2.Refusal	5.Estimate	8.
3.Informed	6.Existing	9.
Information Code **0**		
1.Owner	4.Agent	7.Vacant
2.Relative	5.Estimate	8.
3.Tenant	6.Other	9.

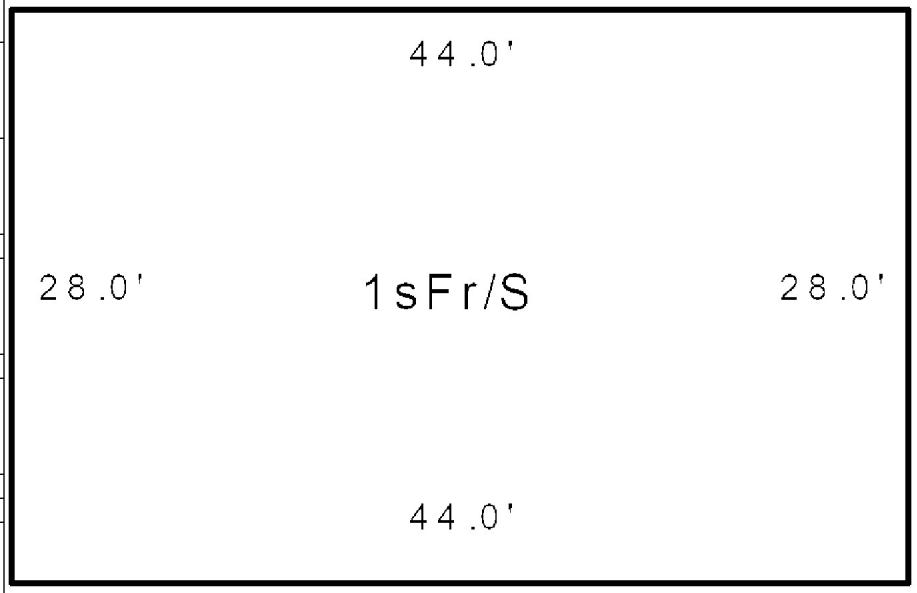

Date Inspected

Additions, Outbuildings & Improvements

Type	Year	Units	Grade	Cond	Phys.	Funct.	Sound Value
					%	%	
					%	%	
					%	%	
					%	%	
					%	%	
					%	%	
					%	%	
					%	%	
					%	%	
					%	%	

1.One Story Fram
2.Two Story Fram
3.Three Story Fr
4.1 & 1/2 Story
5.1 & 3/4 Story
6.2 & 1/2 Story
21.Open Frame Por
22.Encl Frame Por
23.Frame Garage
24.Frame Shed
25.Frame Bay Wind
26.1SFr Overhang
27.Unfin Basement
28.Unfinished Att
29.Finished Attic

Map Lot R12-022-1 Account 2417 Location 18 OVERLOOK DRIVE Card 1 Of 1 11/24/2020

WILSON, DAVID E
WILSON, LUCILLE P
18 OVERLOOK DRIVE
LITCHFIELD ME 04350

B8289P183 B9525P248 B12041P119

Previous Owner
HENDERSON DAVID A
18 OVERLOOK DRIVE

LITCHFIELD ME 04350
Sale Date: 7/15/2015

Previous Owner
SHEPARD AUBERT B
SHEPARD LAURI L
P.O.BOX 355
LITCHFIELD ME 04350
Sale Date: 10/03/2007

Inspection Witnessed By:

X Date

No./Date	Description	Date Insp.

Notes:
2/11/20 NAH CALL GAR COMP.
'17 new 11/2s Garage

Litchfield

Property Data

Neighborhood **153 Overlook Drive**

Tree Growth Year **0**

X Coordinate **0**

Y Coordinate **0**

Zone/Land Use **11 Residential**

Secondary Zone

Topography **2 Rolling**

1.Level	4.Below St	7.Res Protec
2.Rolling	5.Low	8.
3.Above St	6.Swampy	9.

Utilities **4 Drilled Well** **6 Septic System**

1.Public	4.Dr Well	7.Cesspool
2.Water	5.Dug Well	8.Lake/Pond
3.Sewer	6.Septic	9.None

Street **1 Paved**

1.Paved	4.Proposed	7.
2.Semi Imp	5.R/O/W	8.
3.Gravel	6.	9.None

0

0

Sale Data

Sale Date **7/15/2015**

Price **183,000**

Sale Type **2 Land & Buildings**

1.Land	4.MFG UNIT	7.
2.L & B	5.Other	8.
3.Building	6.	9.

Financing **9 Unknown**

1.Convent	4.Seller	7.
2.FHA/VA	5.Private	8.
3.Assumed	6.Cash	9.Unknown

Validity **1 Arms Length Sale**

1.Valid	4.Split	7.Renovate
2.Related	5.Partial	8.Other
3.Distress	6.Exempt	9.

Verified **5 Public Record**

1.Buyer	4.Agent	7.Family
2.Seller	5.Pub Rec	8.Other
3.Lender	6.MLS	9.

Assessment Record

Year	Land	Buildings	Exempt	Total
2007	42,929	94,334	0	137,263
2008	42,929	94,334	12,350	124,913
2009	42,525	151,278	9,500	184,303
2010	42,525	101,264	10,000	133,789
2011	42,525	115,509	10,000	148,034
2012	42,525	115,509	10,000	148,034
2013	42,525	114,277	10,000	146,802
2014	42,525	114,256	10,000	146,781
2015	42,525	113,023	10,000	145,548
2016	42,525	113,003	21,000	134,528
2017	42,525	139,446	26,000	155,971
2018	42,525	139,135	24,960	156,700
2019	48,000	176,900	26,000	198,900
2020	48,000	179,700	31,000	196,700

Land Data

Front Foot	Type	Effective Frontage	Effective Depth	Influence Factor	Influence Code
11.1-100				%	
12.101-200				%	
13.201+				%	
14.				%	
15.				%	
				%	
				%	
Square Foot		**Square Feet**			
16.Regular Lot				%	
17.Secondary Lot				%	
18.Excess Land				%	
19.Condominium				%	
20.Miscellaneous				%	
				%	
				%	
Fract. Acre		**Acreage/Sites**			
21.Houselot (Frac	24	1.00	100	%	0
22.Baselot(Fract)	26	1.01	100	%	0
23.	44	1.00	100	%	0
Acres				%	
24.Houselot				%	
25.Baselot				%	
26.Rear 1				%	
27.Rear 2				%	
28.Rear 3				%	
29.Rear 4				%	

Total Acreage 2.01

Influence Codes

1.Unimproved
2.Excess Frtg
3.Topography
4.Size/Shape
5.Access
6.Restriction
7.Right of Way
8.View/Environ
9.Fract Share
Acres
30.Frontage 1
31.Frontage 2
32.Tillable
33.Tillable
34.Softwood F&O
35.Mixed Wood F&O
36.Hardwood F&O
37.Softwood TG
38.Mixed Wood TG
39.Hardwood TG
40.Wasteland
41.Gravel Pit
42.Mobile Home Si
43.Camp Site
44.Lot Improvemen
45.Access Right
46.Golf Course

Litchfield

Map Lot R12-022-1 | Account 2417 | Location 18 OVERLOOK DRIVE | Card 1 Of 1 | 11/24/2020

Building Style	**1 Conventional**		
0.Uncoded	4.Cape	8.Log	
1.Conv.	5.Garrison	9.Other	
2.Ranch	6.Split	10.Tri-Lev	
3.R Ranch	7.Contemp	11.Earth O	
Dwelling Units	**1**		
Other Units	**0**		
Stories	**1 One Story**		
1.1	4.1.5	7.1.25	
2.2	5.1.75	8.3.5	
3.3	6.2.5	9.4	
Exterior Walls	**1 Clapboard**		
0.Uncoded	4.Asbestos	8.Concrete	
1.Wd Clapb	5.Stucco	9.Other	
2.Vinyl	6.Brick	10.Wd shin	
3.Compos.	7.Stone	11.T1-11	
Roof Surface	**1 Asphalt Shingles**		
1.Asphalt	4.Composit	7.Rolled R	
2.Slate	5.Wood	8.	
3.Metal	6.Other	9.	
SF Masonry Trim	**0**		
OPEN-3-CUSTOM	**0**		
OPEN-4-CUSTOM	**0**		
Year Built	**2005**		
Year Remodeled	**0**		
Foundation	**1 Concrete**		
1.Concrete	4.Wood	7.	
2.C Block	5.Slab	8.	
3.Br/Stone	6.Piers	9.	
Basement	**4 Full Basement**		
1.1/4 Bmt	4.Full Bmt	7.	
2.1/2 Bmt	5.Crawl Sp	8.	
3.3/4 Bmt	6.	9.None	
Bsmt Gar # Cars	**0**		
Wet Basement	**1 Dry Basement**		
1.Dry	4.Dirt Flr	7.	
2.Damp	5.	8.	
3.Wet	6.	9.	

SF Bsmt Living	**0**		
Fin Bsmt Grade	**0 0**		
OPEN-5-CUSTOMIZE	**0**		
Heat Type	**100%**	**1 Hot Water BB**	
0.Uncoded	4.Steam	8.Fl/Wall	
1.HWBB	5.FWA	9.No Heat	
2.HWCI	6.GravWA	10.Radiant	
3.H Pump	7.Electric	11.Radiant	
Cool Type	**0%**	**9 None**	
1.Refrig	4.W&C Air	7.RadHW	
2.Evapor	5.Monitor-	8.	
3.H Pump	6.Monitor-	9.None	
Kitchen Style	**2 Typical**		
1.Modern	4.Obsolete	7.	
2.Typical	5.	8.	
3.Old Type	6.	9.None	
Bath(s) Style	**2 Typical Bath(s)**		
1.Modern	4.Obsolete	7.	
2.Typical	5.	8.	
3.Old Type	6.	9.None	
# Rooms	**4**		
# Bedrooms	**2**		
# Full Baths	**1**		
# Half Baths	**0**		
# Addn Fixtures	**0**		
# Fireplaces	**0**		

TRIO Software
A Division of Harris Computer Systems

Layout	**1 Typical**		
1.Typical	4.	7.	
2.Inadeq	5.	8.	
3.	6.	9.	
Attic	**3 3/4 Finished**		
1.1/4 Fin	4.Full Fin	7.	
2.1/2 Fin	5.Fl/Stair	8.	
3.3/4 Fin	6.	9.None	
Insulation	**1 Full**		
1.Full	4.Minimal	7.	
2.Heavy	5.Partial	8.	
3.Capped	6.	9.None	
Unfinished %	**0%**		
Grade & Factor	**3 Average 100%**		
1.E Grade	4.B Grade	7.AAA Grad	
2.D Grade	5.A Grade	8.M&S	
3.C Grade	6.AA Grade	9.Same	
SQFT (Footprint)	**1232**		
Condition	**4 Average**		
1.Poor	4.Avg	7.V G	
2.Fair	5.Avg+	8.Exc	
3.Avg-	6.Good	9.Same	
Phys. % Good	**0%**		
Funct. % Good	**100%**		
Functional Code	**9 None**		
1.Incomp	4.Delap	7.No Power	
2.O-Built	5.Bsmt	8.LongTerm	
3.Damage	6.Common	9.None	
Econ. % Good	**100%**		
Economic Code	**None**		
0.None	3.No Power	9.None	
1.Location	4.Generate	8.	
2.Encroach	5.Multi-Fa	9.	
Entrance Code	**1 Interior Inspect**		
1.Interior	4.Vacant	7.	
2.Refusal	5.Estimate	8.	
3.Informed	6.Existing	9.	
Information Code	**1 Owner**		
1.Owner	4.Agent	7.Vacant	
2.Relative	5.Estimate	8.	
3.Tenant	6.Other	9.	

Date Inspected 12/02/2011

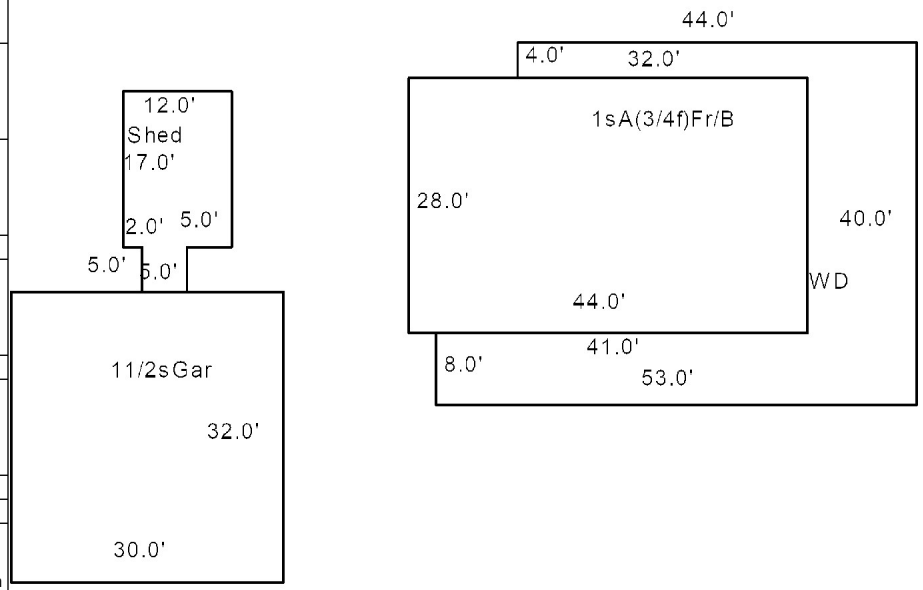

Additions, Outbuildings & Improvements

Type	Year	Units	Grade	Cond	Phys.	Funct.	Sound Value
73 1 1/2s Garage	2016	960	3 110	4	0 %	100 %	
24 Frame Shed	2008	229	3 100	4	0 %	100 %	
68 Wood Deck/s	2009	936	3 100	4	0 %	100 %	
					%	%	
					%	%	
					%	%	
					%	%	
					%	%	
					%	%	
					%	%	

1.One Story Fram
2.Two Story Fram
3.Three Story Fr
4.1 & 1/2 Story
5.1 & 3/4 Story
6.2 & 1/2 Story
21.Open Frame Por
22.Encl Frame Por
23.Frame Garage
24.Frame Shed
25.Frame Bay Wind
26.1SFr Overhang
27.Unfin Basement
28.Unfinished Att
29.Finished Attic

Map Lot R12-022-10 Account 2627 Location 45 OVERLOOK DRIVE Card 1 Of 1 11/24/2020

ESBJERG, HAYLEY J
ESBJERG, JAKE R
45 OVERLOOK DRIVE
LITCHFIELD ME 04350

B12983P195

Previous Owner
DUBE GLEN E
P.O. BOX 819

SABATTUS ME 04280
Sale Date: 7/30/2018

Previous Owner
LAND TREE CORP
P O BOX 3346

AUBURN ME 04212
Sale Date: 4/10/2018

Previous Owner
DUBE GLEN E
118 JORDAN BRIDGE ROAD

SABATTUS ME 04280
Sale Date: 1/13/2010

Inspection Witnessed By:

X Date

No./Date	Description	Date Insp.

Notes:

Litchfield

Property Data

Neighborhood **153 Overlook Drive**

Tree Growth Year **0**

X Coordinate **0**

Y Coordinate **0**

Zone/Land Use **11 Residential**

Secondary Zone

Topography **2 Rolling**

1.Level	4.Below St	7.Res Protec
2.Rolling	5.Low	8.
3.Above St	6.Swampy	9.

Utilities **4 Drilled Well** **6 Septic System**

1.Public	4.Dr Well	7.Cesspool
2.Water	5.Dug Well	8.Lake/Pond
3.Sewer	6.Septic	9.None

Street **1 Paved**

1.Paved	4.Proposed	7.
2.Semi Imp	5.R/O/W	8.
3.Gravel	6.	9.None

0

0

Sale Data

Sale Date **7/30/2018**

Price **188,500**

Sale Type **2 Land & Buildings**

1.Land	4.MFG UNIT	7.
2.L & B	5.Other	8.
3.Building	6.	9.

Financing **9 Unknown**

1.Convent	4.Seller	7.
2.FHA/VA	5.Private	8.
3.Assumed	6.Cash	9.Unknown

Validity **1 Arms Length Sale**

1.Valid	4.Split	7.Renovate
2.Related	5.Partial	8.Other
3.Distress	6.Exempt	9.

Verified **5 Public Record**

1.Buyer	4.Agent	7.Family
2.Seller	5.Pub Rec	8.Other
3.Lender	6.MLS	9.

Assessment Record

Year	Land	Buildings	Exempt	Total
2007	28,000	0	0	28,000
2008	28,000	0	0	28,000
2009	28,000	0	0	28,000
2010	28,000	0	0	28,000
2011	28,000	0	0	28,000
2012	28,000	0	0	28,000
2013	28,000	0	0	28,000
2014	28,000	0	0	28,000
2015	28,000	0	0	28,000
2016	28,000	0	0	28,000
2017	28,000	0	0	28,000
2018	28,000	0	0	28,000
2019	45,000	131,900	0	176,900
2020	45,000	131,900	25,000	151,900

Land Data

Front Foot	Type	Effective Frontage	Effective Depth	Influence Factor	Influence Code
11.1-100				%	
12.101-200				%	
13.201+				%	
14.				%	
15.				%	
				%	
				%	
Square Foot		**Square Feet**			
16.Regular Lot				%	
17.Secondary Lot				%	
18.Excess Land				%	
19.Condominium				%	
20.Miscellaneous				%	
				%	
				%	
Fract. Acre		**Acreage/Sites**			
21.Houselot (Frac	24	1.00	100	%	0
22.Baselot(Fract)	44	1.00	100	%	0
23.				%	
Acres				%	
24.Houselot				%	
25.Baselot				%	
26.Rear 1				%	
27.Rear 2				%	
28.Rear 3				%	
29.Rear 4				%	

Total Acreage 1.00

Influence Codes

1.Unimproved
2.Excess Frtg
3.Topography
4.Size/Shape
5.Access
6.Restriction
7.Right of Way
8.View/Environ
9.Fract Share

Acres

30.Frontage 1
31.Frontage 2
32.Tillable
33.Tillable
34.Softwood F&O
35.Mixed Wood F&O
36.Hardwood F&O
37.Softwood TG
38.Mixed Wood TG
39.Hardwood TG
40.Wasteland
41.Gravel Pit
42.Mobile Home Si
43.Camp Site
44.Lot Improvemen
45.Access Right
46.Golf Course

Litchfield

Map Lot R12-022-10 | Account 2627 | Location 45 OVERLOOK DRIVE | Card 1 Of 1 | 11/24/2020

Building Style **2 Ranch**		
0.Uncoded	4.Cape	8.Log
1.Conv.	5.Garrison	9.Other
2.Ranch	6.Split	10.Tri-Lev
3.R Ranch	7.Contemp	11.Earth O
Dwelling Units **1**		
Other Units **0**		
Stories **1 One Story**		
1.1	4.1.5	7.1.25
2.2	5.1.75	8.3.5
3.3	6.2.5	9.4
Exterior Walls **2 Vinyl**		
0.Uncoded	4.Asbestos	8.Concrete
1.Wd Clapb	5.Stucco	9.Other
2.Vinyl	6.Brick	10.Wd shin
3.Compos.	7.Stone	11.T1-11
Roof Surface **1 Asphalt Shingles**		
1.Asphalt	4.Composit	7.Rolled R
2.Slate	5.Wood	8.
3.Metal	6.Other	9.
SF Masonry Trim **0**		
OPEN-3-CUSTOM **0**		
OPEN-4-CUSTOM **0**		
Year Built **2018**		
Year Remodeled **0**		
Foundation **5 Concrete Slab**		
1.Concrete	4.Wood	7.
2.C Block	5.Slab	8.
3.Br/Stone	6.Piers	9.
Basement **9 No Basement**		
1.1/4 Bmt	4.Full Bmt	7.
2.1/2 Bmt	5.Crawl Sp	8.
3.3/4 Bmt	6.	9.None
Bsmt Gar # Cars **0**		
Wet Basement **9 No Basement**		
1.Dry	4.Dirt Flr	7.
2.Damp	5.	8.
3.Wet	6.	9.

SF Bsmt Living **0**		
Fin Bsmt Grade **0 0**		
OPEN-5-CUSTOMIZE **0**		
Heat Type **100%**	**10 Radiant Heat - 1st level**	
0.Uncoded	4.Steam	8.Fl/Wall
1.HWBB	5.FWA	9.No Heat
2.HWCI	6.GravWA	10.Radiant
3.H Pump	7.Electric	11.Radiant
Cool Type **0%**	**9 None**	
1.Refrig	4.W&C Air	7.RadHW
2.Evapor	5.Monitor-	8.
3.H Pump	6.Monitor-	9.None
Kitchen Style **2 Typical**		
1.Modern	4.Obsolete	7.
2.Typical	5.	8.
3.Old Type	6.	9.None
Bath(s) Style **2 Typical Bath(s)**		
1.Modern	4.Obsolete	7.
2.Typical	5.	8.
3.Old Type	6.	9.None
# Rooms **0**		
# Bedrooms **2**		
# Full Baths **2**		
# Half Baths **0**		
# Addn Fixtures **0**		
# Fireplaces **0**		

TRIO Software
A Division of Harris Computer Systems

Layout **1 Typical**		
1.Typical	4.	7.
2.Inadeq	5.	8.
3.	6.	9.
Attic **9 None**		
1.1/4 Fin	4.Full Fin	7.
2.1/2 Fin	5.Fl/Stair	8.
3.3/4 Fin	6.	9.None
Insulation **1 Full**		
1.Full	4.Minimal	7.
2.Heavy	5.Partial	8.
3.Capped	6.	9.None
Unfinished % **0%**		
Grade & Factor **3 Average 100%**		
1.E Grade	4.B Grade	7.AAA Grad
2.D Grade	5.A Grade	8.M&S
3.C Grade	6.AA Grade	9.Same
SQFT (Footprint) **1232**		
Condition **4 Average**		
1.Poor	4.Avg	7.V G
2.Fair	5.Avg+	8.Exc
3.Avg-	6.Good	9.Same
Phys. % Good **0%**		
Funct. % Good **100%**		
Functional Code **9 None**		
1.Incomp	4.Delap	7.No Power
2.O-Built	5.Bsmt	8.LongTerm
3.Damage	6.Common	9.None
Econ. % Good **100%**		
Economic Code **None**		
0.None	3.No Power	9.None
1.Location	4.Generate	8.
2.Encroach	5.Multi-Fa	9.
Entrance Code **3 Information Only**		
1.Interior	4.Vacant	7.
2.Refusal	5.Estimate	8.
3.Informed	6.Existing	9.
Information Code **1 Owner**		
1.Owner	4.Agent	7.Vacant
2.Relative	5.Estimate	8.
3.Tenant	6.Other	9.

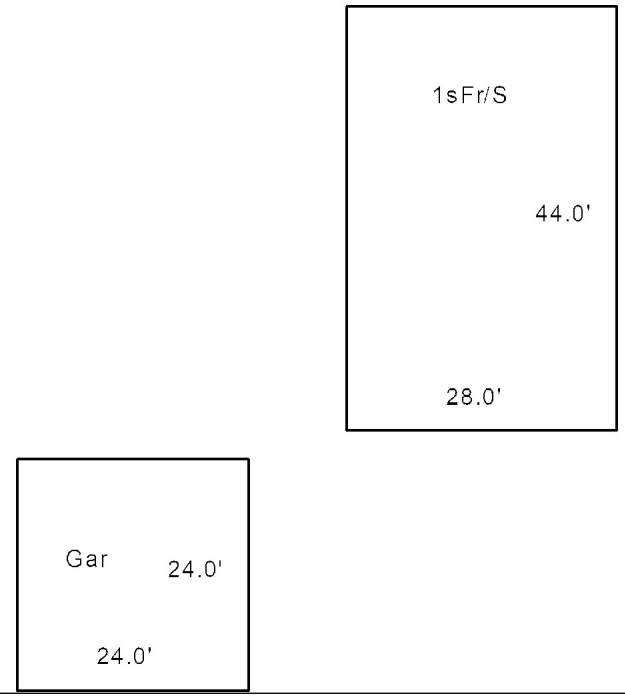

Date Inspected 10/08/2018

Additions, Outbuildings & Improvements

Type	Year	Units	Grade	Cond	Phys.	Funct.	Sound Value
23 Frame Garage	0	576	0 0	0	0 %	0 %	
					%	%	
					%	%	
					%	%	
					%	%	
					%	%	
					%	%	
					%	%	
					%	%	
					%	%	

1.One Story Fram
2.Two Story Fram
3.Three Story Fr
4.1 & 1/2 Story
5.1 & 3/4 Story
6.2 & 1/2 Story
21.Open Frame Por
22.Encl Frame Por
23.Frame Garage
24.Frame Shed
25.Frame Bay Wind
26.1SFr Overhang
27.Unfin Basement
28.Unfinished Att
29.Finished Attic

Map Lot R12-022-11 Account 2628 Location 9 OVERLOOK DRIVE Card 1 Of 1 11/24/2020

GREEN, PATRICK T
GREEN, CYNTHIA M
9 OVERLOOK DR
LITCHFIELD ME 04350

B13067P262

Previous Owner
MARTIN, GARY L.
LAURENT, CLYDA
4035 16TH STREET NE
HICKORY NC 28601
Sale Date: 10/26/2018

Previous Owner
MARTIN, LUCILLE
C/O GARY MARTIN
4035 16TH STREET NE
HICKORY NC 28601
Sale Date: 9/25/2015

Previous Owner
HABITEC INC
16 POLAND SPRING ROAD

AUBURN ME 04210
Sale Date: 9/02/2009

Inspection Witnessed By:

X Date

No./Date	Description	Date Insp.

Notes:

2/11/20 NAH, REMOVE 8X10 SHED, ADD NEW SHED, ADD WD (IN DENCED-IN AREA, DIMS PER PERMIT).

Litchfield

Property Data

Neighborhood **153 Overlook Drive**

Tree Growth Year **0**

X Coordinate **0**

Y Coordinate **0**

Zone/Land Use **11 Residential**

Secondary Zone

Topography **2 Rolling**

1.Level	4.Below St	7.Res Protec
2.Rolling	5.Low	8.
3.Above St	6.Swampy	9.

Utilities **4 Drilled Well** **6 Septic System**

1.Public	4.Dr Well	7.Cesspool
2.Water	5.Dug Well	8.Lake/Pond
3.Sewer	6.Septic	9.None

Street **1 Paved**

1.Paved	4.Proposed	7.
2.Semi Imp	5.R/O/W	8.
3.Gravel	6.	9.None

0

0

Sale Data

Sale Date **10/26/2018**

Price **201,300**

Sale Type **2 Land & Buildings**

1.Land	4.MFG UNIT	7.
2.L & B	5.Other	8.
3.Building	6.	9.

Financing **9 Unknown**

1.Convent	4.Seller	7.
2.FHA/VA	5.Private	8.
3.Assumed	6.Cash	9.Unknown

Validity **1 Arms Length Sale**

1.Valid	4.Split	7.Renovate
2.Related	5.Partial	8.Other
3.Distress	6.Exempt	9.

Verified **5 Public Record**

1.Buyer	4.Agent	7.Family
2.Seller	5.Pub Rec	8.Other
3.Lender	6.MLS	9.

Assessment Record

Year	Land	Buildings	Exempt	Total
2007	28,174	0	0	28,174
2008	28,174	0	0	28,174
2009	28,150	0	0	28,150
2010	28,150	0	0	28,150
2011	28,150	0	0	28,150
2012	28,150	0	0	28,150
2013	28,150	0	0	28,150
2014	28,150	0	0	28,150
2015	28,150	0	0	28,150
2016	28,150	0	0	28,150
2017	28,150	0	0	28,150
2018	28,150	0	0	28,150
2019	45,200	131,600	20,000	156,800
2020	45,200	134,000	25,000	154,200

Land Data

Front Foot

11.1-100
12.101-200
13.201+
14.
15.

Square Foot

16.Regular Lot
17.Secondary Lot
18.Excess Land
19.Condominium
20.Miscellaneous

Fract. Acre

21.Houselot (Frac
22.Baselot(Fract)
23.

Acres

24.Houselot
25.Baselot
26.Rear 1
27.Rear 2
28.Rear 3
29.Rear 4

Type	Effective Frontage	Effective Depth	Influence Factor	Influence Code
			%	
			%	
			%	
			%	
			%	
			%	
			%	
	Square Feet			
			%	
			%	
			%	
			%	
			%	
			%	
			%	
	Acreage/Sites			
24	1.00	100	%	0
26	0.06	100	%	0
44	1.00	100	%	0
			%	
			%	
			%	
			%	

Total Acreage 1.06

Influence Codes

1.Unimproved
2.Excess Frtg
3.Topography
4.Size/Shape
5.Access
6.Restriction
7.Right of Way
8.View/Environ
9.Fract Share

Acres

30.Frontage 1
31.Frontage 2
32.Tillable
33.Tillable
34.Softwood F&O
35.Mixed Wood F&O
36.Hardwood F&O
37.Softwood TG
38.Mixed Wood TG
39.Hardwood TG
40.Wasteland
41.Gravel Pit
42.Mobile Home Si
43.Camp Site
44.Lot Improvemen
45.Access Right
46.Golf Course

Litchfield

Map Lot R12-022-11 | Account 2628 | Location 9 OVERLOOK DRIVE | Card 1 Of 1 | 11/24/2020

Building Style	**2 Ranch**		
0.Uncoded	4.Cape	8.Log	
1.Conv.	5.Garrison	9.Other	
2.Ranch	6.Split	10.Tri-Lev	
3.R Ranch	7.Contemp	11.Earth O	
Dwelling Units	**1**		
Other Units	**0**		
Stories	**1 One Story**		
1.1	4.1.5	7.1.25	
2.2	5.1.75	8.3.5	
3.3	6.2.5	9.4	
Exterior Walls	**2 Vinyl**		
0.Uncoded	4.Asbestos	8.Concrete	
1.Wd Clapb	5.Stucco	9.Other	
2.Vinyl	6.Brick	10.Wd shin	
3.Compos.	7.Stone	11.T1-11	
Roof Surface	**1 Asphalt Shingles**		
1.Asphalt	4.Composit	7.Rolled R	
2.Slate	5.Wood	8.	
3.Metal	6.Other	9.	
SF Masonry Trim	**0**		
OPEN-3-CUSTOM	**0**		
OPEN-4-CUSTOM	**0**		
Year Built	**2018**		
Year Remodeled	**0**		
Foundation	**5 Concrete Slab**		
1.Concrete	4.Wood	7.	
2.C Block	5.Slab	8.	
3.Br/Stone	6.Piers	9.	
Basement	**9 No Basement**		
1.1/4 Bmt	4.Full Bmt	7.	
2.1/2 Bmt	5.Crawl Sp	8.	
3.3/4 Bmt	6.	9.None	
Bsmt Gar # Cars	**0**		
Wet Basement	**9 No Basement**		
1.Dry	4.Dirt Flr	7.	
2.Damp	5.	8.	
3.Wet	6.	9.	

SF Bsmt Living	**0**		
Fin Bsmt Grade	**0 0**		
OPEN-5-CUSTOMIZE	**0**		
Heat Type	**100%**	**11 Radiant Heat**	
0.Uncoded	4.Steam	8.Fl/Wall	
1.HWBB	5.FWA	9.No Heat	
2.HWCI	6.GravWA	10.Radiant	
3.H Pump	7.Electric	11.Radiant	
Cool Type	**0%**	**9 None**	
1.Refrig	4.W&C Air	7.RadHW	
2.Evapor	5.Monitor-	8.	
3.H Pump	6.Monitor-	9.None	
Kitchen Style	**2 Typical**		
1.Modern	4.Obsolete	7.	
2.Typical	5.	8.	
3.Old Type	6.	9.None	
Bath(s) Style	**2 Typical Bath(s)**		
1.Modern	4.Obsolete	7.	
2.Typical	5.	8.	
3.Old Type	6.	9.None	
# Rooms	**0**		
# Bedrooms	**2**		
# Full Baths	**0**		
# Half Baths	**0**		
# Addn Fixtures	**0**		
# Fireplaces	**0**		

TRIO Software
A Division of Harris Computer Systems

Layout	**1 Typical**		
1.Typical	4.	7.	
2.Inadeq	5.	8.	
3.	6.	9.	
Attic	**9 None**		
1.1/4 Fin	4.Full Fin	7.	
2.1/2 Fin	5.Fl/Stair	8.	
3.3/4 Fin	6.	9.None	
Insulation	**1 Full**		
1.Full	4.Minimal	7.	
2.Heavy	5.Partial	8.	
3.Capped	6.	9.None	
Unfinished %	**0%**		
Grade & Factor	**3 Average 100%**		
1.E Grade	4.B Grade	7.AAA Grad	
2.D Grade	5.A Grade	8.M&S	
3.C Grade	6.AA Grade	9.Same	
SQFT (Footprint)	**1232**		
Condition	**4 Average**		
1.Poor	4.Avg	7.V G	
2.Fair	5.Avg+	8.Exc	
3.Avg-	6.Good	9.Same	
Phys. % Good	**0%**		
Funct. % Good	**100%**		
Functional Code	**9 None**		
1.Incomp	4.Delap	7.No Power	
2.O-Built	5.Bsmt	8.LongTerm	
3.Damage	6.Common	9.None	
Econ. % Good	**100%**		
Economic Code	**None**		
0.None	3.No Power	9.None	
1.Location	4.Generate	8.	
2.Encroach	5.Multi-Fa	9.	
Entrance Code	**3 Information Only**		
1.Interior	4.Vacant	7.	
2.Refusal	5.Estimate	8.	
3.Informed	6.Existing	9.	
Information Code	**4 Agent**		
1.Owner	4.Agent	7.Vacant	
2.Relative	5.Estimate	8.	
3.Tenant	6.Other	9.	

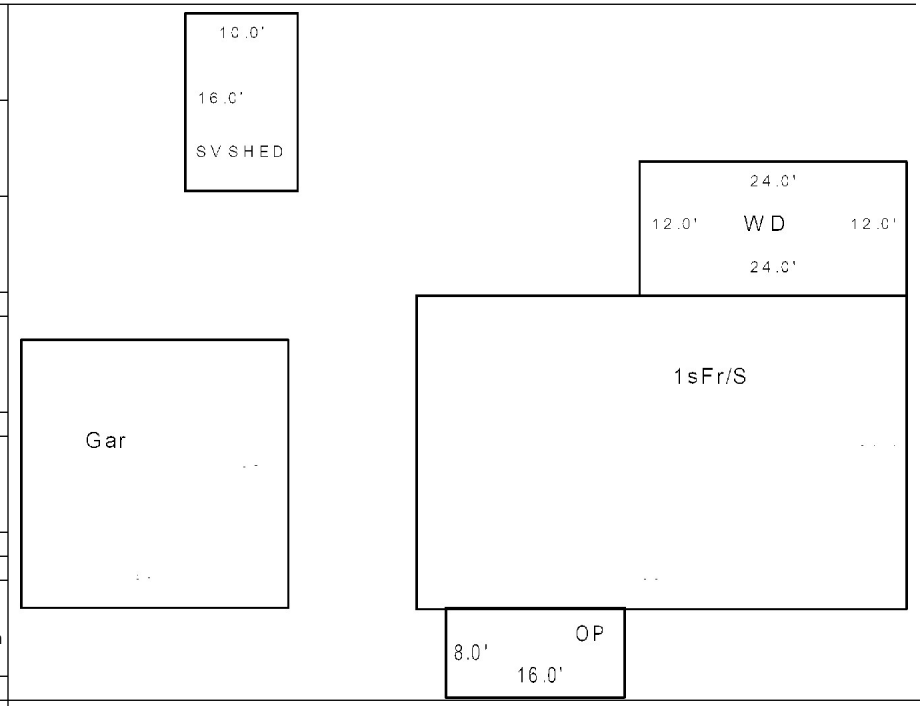

Date Inspected 10/08/2018

Additions, Outbuildings & Improvements

Type	Year	Units	Grade	Cond	Phys.	Funct.	Sound Value
21 Open Frame	0	128	0 0	0	0 %	0 %	
23 Frame Garage	2018	576	3 100	4	0 %	100 %	
24 Frame Shed	2019				%	%	2,000
68 Wood Deck/s	2019	288	3 100	4	0 %	100 %	
					%	%	
					%	%	
					%	%	
					%	%	
					%	%	
					%	%	

1.One Story Fram
2.Two Story Fram
3.Three Story Fr
4.1 & 1/2 Story
5.1 & 3/4 Story
6.2 & 1/2 Story
21.Open Frame Por
22.Encl Frame Por
23.Frame Garage
24.Frame Shed
25.Frame Bay Wind
26.1SFr Overhang
27.Unfin Basement
28.Unfinished Att
29.Finished Attic

Map Lot R12-022-12 Account 2629 Location 17 OVERLOOK DRIVE Card 1 Of 1 11/24/2020

STANLEY KYLE W
STANLEY MICHAELA L
17 OVERLOOK DRIVE
LITCHFIELD ME 04350

B8169P283 B9503P145 B9899P246

Previous Owner
HABITEC INC
16 POLAND SPRING ROAD

AUBURN ME 04210
Sale Date: 11/03/2008

Previous Owner
DUBE GLEN E
118 JORDAN BRIDGE ROAD

SABATTUS ME 04280
Sale Date: 9/18/2007

Inspection Witnessed By:

X Date

No./Date	Description	Date Insp.

Notes:

Property Data

Neighborhood	**153 Overlook Drive**
Tree Growth Year	**0**
X Coordinate	**0**
Y Coordinate	**0**
Zone/Land Use	**11 Residential**
Secondary Zone	
Topography	**2 Rolling**

1.Level	4.Below St	7.Res Protec
2.Rolling	5.Low	8.
3.Above St	6.Swampy	9.

Utilities	**4 Drilled Well**	**6 Septic System**

1.Public	4.Dr Well	7.Cesspool
2.Water	5.Dug Well	8.Lake/Pond
3.Sewer	6.Septic	9.None

Street	**1 Paved**

1.Paved	4.Proposed	7.
2.Semi Imp	5.R/O/W	8.
3.Gravel	6.	9.None

0

0

Sale Data

Sale Date	**11/03/2008**
Price	**174,000**
Sale Type	**2 Land & Buildings**

1.Land	4.MFG UNIT	7.
2.L & B	5.Other	8.
3.Building	6.	9.

Financing	**1 Conventional**

1.Convent	4.Seller	7.
2.FHA/VA	5.Private	8.
3.Assumed	6.Cash	9.Unknown

Validity	**1 Arms Length Sale**

1.Valid	4.Split	7.Renovate
2.Related	5.Partial	8.Other
3.Distress	6.Exempt	9.

Verified	**5 Public Record**

1.Buyer	4.Agent	7.Family
2.Seller	5.Pub Rec	8.Other
3.Lender	6.MLS	9.

Assessment Record

Year	Land	Buildings	Exempt	Total
2007	40,058	137,274	0	177,332
2008	40,058	137,107	0	177,165
2009	40,050	128,915	0	168,965
2010	40,050	109,828	10,000	139,878
2011	40,050	106,645	10,000	136,695
2012	40,050	106,645	10,000	136,695
2013	40,050	105,646	10,000	135,696
2014	40,050	105,499	10,000	135,549
2015	40,050	104,502	10,000	134,552
2016	40,050	104,502	15,000	129,552
2017	40,050	103,502	20,000	123,552
2018	40,050	103,356	19,200	124,206
2019	45,100	146,000	20,000	171,100
2020	45,100	146,000	25,000	166,100

Land Data

Front Foot	Type	Effective Frontage	Effective Depth	Influence Factor	Influence Code
11.1-100				%	
12.101-200				%	
13.201+				%	
14.				%	
15.				%	
				%	
				%	
Square Foot		**Square Feet**			
16.Regular Lot				%	
17.Secondary Lot				%	
18.Excess Land				%	
19.Condominium				%	
20.Miscellaneous				%	
				%	
				%	
Fract. Acre		**Acreage/Sites**			
21.Houselot (Frac	24	1.00	100	%	0
22.Baselot(Fract)	26	0.02	100	%	0
23.	44	1.00	100	%	0
Acres				%	
24.Houselot				%	
25.Baselot				%	
26.Rear 1				%	
27.Rear 2				%	
28.Rear 3				%	
29.Rear 4				%	

Total Acreage 1.02

Influence Codes

1.Unimproved
2.Excess Frtg
3.Topography
4.Size/Shape
5.Access
6.Restriction
7.Right of Way
8.View/Environ
9.Fract Share

Acres

30.Frontage 1
31.Frontage 2
32.Tillable
33.Tillable
34.Softwood F&O
35.Mixed Wood F&O
36.Hardwood F&O
37.Softwood TG
38.Mixed Wood TG
39.Hardwood TG
40.Wasteland
41.Gravel Pit
42.Mobile Home Si
43.Camp Site
44.Lot Improvemen
45.Access Right
46.Golf Course

Litchfield

Litchfield

Map Lot R12-022-12 | Account 2629 | Location 17 OVERLOOK DRIVE | Card 1 Of 1 | 11/24/2020

Building Style **2 Ranch**		
0.Uncoded	4.Cape	8.Log
1.Conv.	5.Garrison	9.Other
2.Ranch	6.Split	10.Tri-Lev
3.R Ranch	7.Contemp	11.Earth O
Dwelling Units **1**		
Other Units **0**		
Stories **1 One Story**		
1.1	4.1.5	7.1.25
2.2	5.1.75	8.3.5
3.3	6.2.5	9.4
Exterior Walls **2 Vinyl**		
0.Uncoded	4.Asbestos	8.Concrete
1.Wd Clapb	5.Stucco	9.Other
2.Vinyl	6.Brick	10.Wd shin
3.Compos.	7.Stone	11.T1-11
Roof Surface **1 Asphalt Shingles**		
1.Asphalt	4.Composit	7.Rolled R
2.Slate	5.Wood	8.
3.Metal	6.Other	9.
SF Masonry Trim **0**		
OPEN-3-CUSTOM **0**		
OPEN-4-CUSTOM **0**		
Year Built **2007**		
Year Remodeled **0**		
Foundation **1 Concrete**		
1.Concrete	4.Wood	7.
2.C Block	5.Slab	8.
3.Br/Stone	6.Piers	9.
Basement **4 Full Basement**		
1.1/4 Bmt	4.Full Bmt	7.
2.1/2 Bmt	5.Crawl Sp	8.
3.3/4 Bmt	6.	9.None
Bsmt Gar # Cars **0**		
Wet Basement **1 Dry Basement**		
1.Dry	4.Dirt Flr	7.
2.Damp	5.	8.
3.Wet	6.	9.

SF Bsmt Living **0**		
Fin Bsmt Grade **0 0**		
OPEN-5-CUSTOMIZE **0**		
Heat Type **100%** **1 Hot Water BB**		
0.Uncoded	4.Steam	8.Fl/Wall
1.HWBB	5.FWA	9.No Heat
2.HWCI	6.GravWA	10.Radiant
3.H Pump	7.Electric	11.Radiant
Cool Type **0%** **9 None**		
1.Refrig	4.W&C Air	7.RadHW
2.Evapor	5.Monitor-	8.
3.H Pump	6.Monitor-	9.None
Kitchen Style **2 Typical**		
1.Modern	4.Obsolete	7.
2.Typical	5.	8.
3.Old Type	6.	9.None
Bath(s) Style **2 Typical Bath(s)**		
1.Modern	4.Obsolete	7.
2.Typical	5.	8.
3.Old Type	6.	9.None
# Rooms **6**		
# Bedrooms **3**		
# Full Baths **2**		
# Half Baths **1**		
# Addn Fixtures **0**		
# Fireplaces **0**		

TRIO Software
A Division of Harris Computer Systems

Layout **1 Typical**		
1.Typical	4.	7.
2.Inadeq	5.	8.
3.	6.	9.
Attic **9 None**		
1.1/4 Fin	4.Full Fin	7.
2.1/2 Fin	5.Fl/Stair	8.
3.3/4 Fin	6.	9.None
Insulation **1 Full**		
1.Full	4.Minimal	7.
2.Heavy	5.Partial	8.
3.Capped	6.	9.None
Unfinished % **0%**		
Grade & Factor **3 Average 100%**		
1.E Grade	4.B Grade	7.AAA Grad
2.D Grade	5.A Grade	8.M&S
3.C Grade	6.AA Grade	9.Same
SQFT (Footprint) **1296**		
Condition **4 Average**		
1.Poor	4.Avg	7.V G
2.Fair	5.Avg+	8.Exc
3.Avg-	6.Good	9.Same
Phys. % Good **0%**		
Funct. % Good **100%**		
Functional Code **9 None**		
1.Incomp	4.Delap	7.No Power
2.O-Built	5.Bsmt	8.LongTerm
3.Damage	6.Common	9.None
Econ. % Good **100%**		
Economic Code **None**		
0.None	3.No Power	9.None
1.Location	4.Generate	8.
2.Encroach	5.Multi-Fa	9.
Entrance Code **5 Estimated**		
1.Interior	4.Vacant	7.
2.Refusal	5.Estimate	8.
3.Informed	6.Existing	9.
Information Code **5 Estimate**		
1.Owner	4.Agent	7.Vacant
2.Relative	5.Estimate	8.
3.Tenant	6.Other	9.

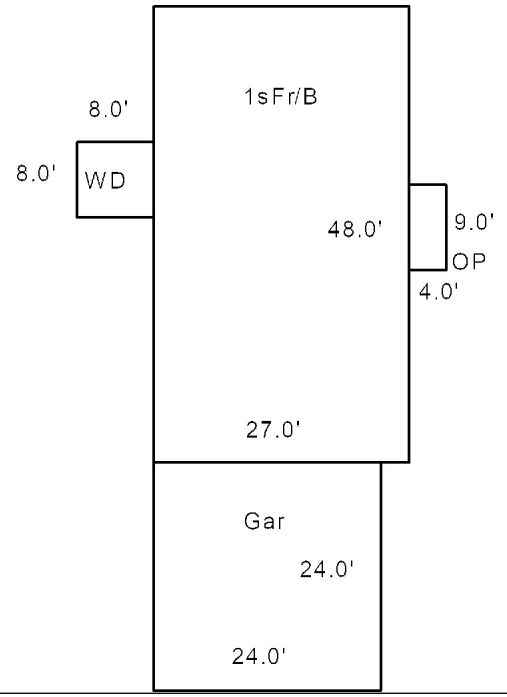

Date Inspected 10/09/2018

Additions, Outbuildings & Improvements

Type	Year	Units	Grade	Cond	Phys.	Funct.	Sound Value
21 Open Frame	0	36	0 0	0	0 %	0 %	
68 Wood Deck/s	0	64	0 0	0	0 %	0 %	
23 Frame Garage	0	576	0 0	0	0 %	0 %	
					%	%	
					%	%	
					%	%	
					%	%	
					%	%	
					%	%	
					%	%	

1.One Story Fram
2.Two Story Fram
3.Three Story Fr
4.1 & 1/2 Story
5.1 & 3/4 Story
6.2 & 1/2 Story
21.Open Frame Por
22.Encl Frame Por
23.Frame Garage
24.Frame Shed
25.Frame Bay Wind
26.1SFr Overhang
27.Unfin Basement
28.Unfinished Att
29.Finished Attic

Map Lot R12-022-2 Account 764 Location 281 WHIPPOORWILL ROAD Card 1 Of 1 11/24/2020

HARKINS MICHAEL III
281 WHIPPOORWILL ROAD
LITCHFIELD ME 04350

B9052P46

Previous Owner
DUBE GLEN
PO BOX 819

SABATTUS ME 04280
Sale Date: 8/31/2006

Previous Owner
HARKINS MICHAEL HEIRS OF
105 JORDAN BRIDGE ROAD

SABATTUS ME 04280
Sale Date: 10/04/2005

Previous Owner
HARKINS, JOHN M AS REP OF JOHN HARKINS ESTATE
PO BOX 61

LITCHFIELD ME 04350
Sale Date: 10/19/2004

Inspection Witnessed By:

X Date

No./Date	Description	Date Insp.

Notes:

Property Data

Neighborhood **226 Whippoorwill Road**

Tree Growth Year **0**

X Coordinate **0**

Y Coordinate **0**

Zone/Land Use **11 Residential**

Secondary Zone

Topography **2 Rolling**

1.Level	4.Below St	7.Res Protec
2.Rolling	5.Low	8.
3.Above St	6.Swampy	9.

Utilities **4 Drilled Well** **6 Septic System**

1.Public	4.Dr Well	7.Cesspool
2.Water	5.Dug Well	8.Lake/Pond
3.Sewer	6.Septic	9.None

Street **1 Paved**

1.Paved	4.Proposed	7.
2.Semi Imp	5.R/O/W	8.
3.Gravel	6.	9.None

0

0

Sale Data

Sale Date

Price

Sale Type

1.Land	4.MFG UNIT	7.
2.L & B	5.Other	8.
3.Building	6.	9.

Financing

1.Convent	4.Seller	7.
2.FHA/VA	5.Private	8.
3.Assumed	6.Cash	9.Unknown

Validity

1.Valid	4.Split	7.Renovate
2.Related	5.Partial	8.Other
3.Distress	6.Exempt	9.

Verified

1.Buyer	4.Agent	7.Family
2.Seller	5.Pub Rec	8.Other
3.Lender	6.MLS	9.

Assessment Record

Year	Land	Buildings	Exempt	Total
2007	48,729	106,055	13,000	141,784
2008	48,729	105,770	12,350	142,149
2009	47,525	112,178	9,500	150,203
2010	47,525	100,361	10,000	137,886
2011	47,525	55,552	10,000	93,077
2012	47,525	55,552	10,000	93,077
2013	47,525	60,736	10,000	98,261
2014	47,525	60,736	10,000	98,261
2015	47,525	60,736	10,000	98,261
2016	47,525	60,736	15,000	93,261
2017	47,525	60,736	20,000	88,261
2018	47,525	60,736	19,200	89,061
2019	54,000	69,100	20,000	103,100
2020	54,000	69,100	25,000	98,100

Land Data

Front Foot	Type	Effective Frontage	Effective Depth	Influence Factor	Influence Code
11.1-100				%	
12.101-200				%	
13.201+				%	
14.				%	
15.				%	
				%	
				%	
Square Foot		**Square Feet**			
16.Regular Lot				%	
17.Secondary Lot				%	
18.Excess Land				%	
19.Condominium				%	
20.Miscellaneous				%	
				%	
				%	
Fract. Acre		**Acreage/Sites**			
21.Houselot (Frac	24	1.00	100	%	0
22.Baselot(Fract)	26	3.01	100	%	0
23.	44	1.00	100	%	0
Acres				%	
24.Houselot				%	
25.Baselot				%	
26.Rear 1				%	
27.Rear 2				%	
28.Rear 3				%	
29.Rear 4				%	

Total Acreage 4.01

Influence Codes

1.Unimproved
2.Excess Frtg
3.Topography
4.Size/Shape
5.Access
6.Restriction
7.Right of Way
8.View/Environ
9.Fract Share
Acres
30.Frontage 1
31.Frontage 2
32.Tillable
33.Tillable
34.Softwood F&O
35.Mixed Wood F&O
36.Hardwood F&O
37.Softwood TG
38.Mixed Wood TG
39.Hardwood TG
40.Wasteland
41.Gravel Pit
42.Mobile Home Si
43.Camp Site
44.Lot Improvemen
45.Access Right
46.Golf Course

Litchfield

Litchfield

Map Lot R12-022-2 | Account 764 | Location 281 WHIPPOORWILL ROAD | Card 1 Of 1 | 11/24/2020

Building Style	**1 Conventional**		
0.Uncoded	4.Cape	8.Log	
1.Conv.	5.Garrison	9.Other	
2.Ranch	6.Split	10.Tri-Lev	
3.R Ranch	7.Contemp	11.Earth O	
Dwelling Units	**1**		
Other Units	**0**		
Stories	**4 One & 1/2 Story**		
1.1	4.1.5	7.1.25	
2.2	5.1.75	8.3.5	
3.3	6.2.5	9.4	
Exterior Walls	**4 Asbestos Siding**		
0.Uncoded	4.Asbestos	8.Concrete	
1.Wd Clapb	5.Stucco	9.Other	
2.Vinyl	6.Brick	10.Wd shin	
3.Compos.	7.Stone	11.T1-11	
Roof Surface	**3 Sheet Metal**		
1.Asphalt	4.Composit	7.Rolled R	
2.Slate	5.Wood	8.	
3.Metal	6.Other	9.	
SF Masonry Trim	**0**		
OPEN-3-CUSTOM	**0**		
OPEN-4-CUSTOM	**0**		
Year Built	**1900**		
Year Remodeled	**0**		
Foundation	**3 Brick &/or Stone**		
1.Concrete	4.Wood	7.	
2.C Block	5.Slab	8.	
3.Br/Stone	6.Piers	9.	
Basement	**3 3/4 Basement**		
1.1/4 Bmt	4.Full Bmt	7.	
2.1/2 Bmt	5.Crawl Sp	8.	
3.3/4 Bmt	6.	9.None	
Bsmt Gar # Cars	**0**		
Wet Basement	**1 Dry Basement**		
1.Dry	4.Dirt Flr	7.	
2.Damp	5.	8.	
3.Wet	6.	9.	

SF Bsmt Living	**0**		
Fin Bsmt Grade	**0 0**		
OPEN-5-CUSTOMIZE	**0**		
Heat Type	**100%**	**5 Forced Warm Air**	
0.Uncoded	4.Steam	8.Fl/Wall	
1.HWBB	5.FWA	9.No Heat	
2.HWCI	6.GravWA	10.Radiant	
3.H Pump	7.Electric	11.Radiant	
Cool Type	**0%**	**9 None**	
1.Refrig	4.W&C Air	7.RadHW	
2.Evapor	5.Monitor-	8.	
3.H Pump	6.Monitor-	9.None	
Kitchen Style	**2 Typical**		
1.Modern	4.Obsolete	7.	
2.Typical	5.	8.	
3.Old Type	6.	9.None	
Bath(s) Style	**2 Typical Bath(s)**		
1.Modern	4.Obsolete	7.	
2.Typical	5.	8.	
3.Old Type	6.	9.None	
# Rooms	**0**		
# Bedrooms	**0**		
# Full Baths	**1**		
# Half Baths	**0**		
# Addn Fixtures	**0**		
# Fireplaces	**1**		

TRIO Software
A Division of Harris Computer Systems

Layout	**1 Typical**		
1.Typical	4.	7.	
2.Inadeq	5.	8.	
3.	6.	9.	
Attic	**9 None**		
1.1/4 Fin	4.Full Fin	7.	
2.1/2 Fin	5.Fl/Stair	8.	
3.3/4 Fin	6.	9.None	
Insulation	**4 Minimal**		
1.Full	4.Minimal	7.	
2.Heavy	5.Partial	8.	
3.Capped	6.	9.None	
Unfinished %	**0%**		
Grade & Factor	**2 Fair 100%**		
1.E Grade	4.B Grade	7.AAA Grad	
2.D Grade	5.A Grade	8.M&S	
3.C Grade	6.AA Grade	9.Same	
SQFT (Footprint)	**1312**		
Condition	**2 Fair**		
1.Poor	4.Avg	7.V G	
2.Fair	5.Avg+	8.Exc	
3.Avg-	6.Good	9.Same	
Phys. % Good	**0%**		
Funct. % Good	**75%**		
Functional Code	**3 Damage**		
1.Incomp	4.Delap	7.No Power	
2.O-Built	5.Bsmt	8.LongTerm	
3.Damage	6.Common	9.None	
Econ. % Good	**100%**		
Economic Code	**None**		
0.None	3.No Power	9.None	
1.Location	4.Generate	8.	
2.Encroach	5.Multi-Fa	9.	
Entrance Code	**5 Estimated**		
1.Interior	4.Vacant	7.	
2.Refusal	5.Estimate	8.	
3.Informed	6.Existing	9.	
Information Code	**5 Estimate**		
1.Owner	4.Agent	7.Vacant	
2.Relative	5.Estimate	8.	
3.Tenant	6.Other	9.	

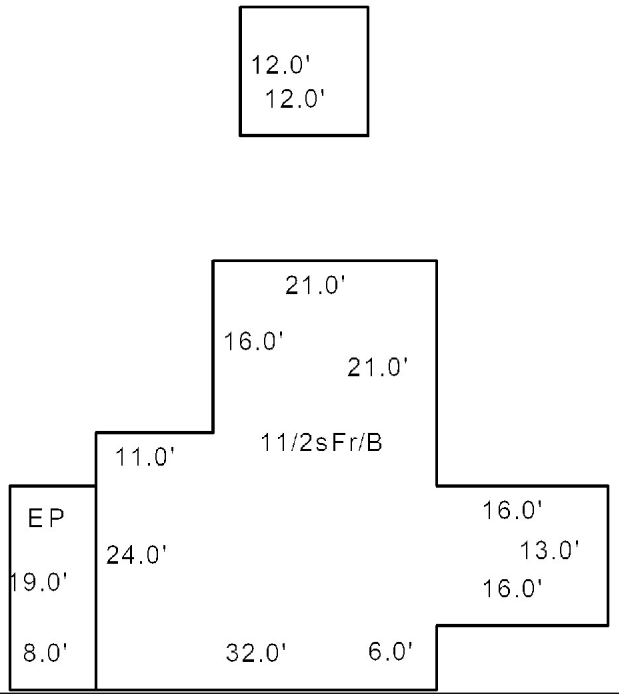

Date Inspected 10/09/2018

Additions, Outbuildings & Improvements

Type	Year	Units	Grade	Cond	Phys.	Funct.	Sound Value
22 Encl Frame	0	152	9 100	9	0 %	0 %	
81 Barn	0	1152	2 100	1	0 %	50 %	
81 Barn	0	2067	2 100	1	0 %	50 %	
24 Frame Shed	0				%	%	200
24 Frame Shed	0	260	2 100	2	0 %	50 %	
24 Frame Shed	0	378	2 100	1	0 %	50 %	
23 Frame Garage	0	432	2 100	1	0 %	50 %	
24 Frame Shed	0	336	2 100	1	0 %	50 %	
					%	%	
					%	%	

1.One Story Fram
2.Two Story Fram
3.Three Story Fr
4.1 & 1/2 Story
5.1 & 3/4 Story
6.2 & 1/2 Story
21.Open Frame Por
22.Encl Frame Por
23.Frame Garage
24.Frame Shed
25.Frame Bay Wind
26.1SFr Overhang
27.Unfin Basement
28.Unfinished Att
29.Finished Attic

Map Lot R12-022-3 Account 2620 Location 44 OVERLOOK DRIVE Card 1 Of 1 11/24/2020

ELIAS, COLEEN
44 OVERLOOK DRIVE
LITCHFIELD ME 04250

B12936P281 B13103P151

Previous Owner
DUBE, GLEN E.
P O BOX 819

SABATTUS ME 04280
Sale Date: 12/07/2018

Previous Owner
LAND TREE CORP.
P O BOX 3346

AUBURN ME 04212 3346
Sale Date: 6/11/2018

Previous Owner
DUBE GLEN E
118 JORDAN BRIDGE ROAD

SABATTUS ME 04280
Sale Date: 1/13/2010

Inspection Witnessed By:

X Date

No./Date	Description	Date Insp.

Notes:
2/11/20 W/MR ADD 1 1/2sGAR

Litchfield

Property Data

Neighborhood **153 Overlook Drive**

Tree Growth Year **0**

X Coordinate **0**

Y Coordinate **0**

Zone/Land Use **11 Residential**

Secondary Zone

Topography **2 Rolling**

1.Level	4.Below St	7.Res Protec
2.Rolling	5.Low	8.
3.Above St	6.Swampy	9.

Utilities **4 Drilled Well** **6 Septic System**

1.Public	4.Dr Well	7.Cesspool
2.Water	5.Dug Well	8.Lake/Pond
3.Sewer	6.Septic	9.None

Street **1 Paved**

1.Paved	4.Proposed	7.
2.Semi Imp	5.R/O/W	8.
3.Gravel	6.	9.None

0

0

Sale Data

Sale Date **12/07/2018**

Price **172,400**

Sale Type **1 Land Only**

1.Land	4.MFG UNIT	7.
2.L & B	5.Other	8.
3.Building	6.	9.

Financing **9 Unknown**

1.Convent	4.Seller	7.
2.FHA/VA	5.Private	8.
3.Assumed	6.Cash	9.Unknown

Validity **1 Arms Length Sale**

1.Valid	4.Split	7.Renovate
2.Related	5.Partial	8.Other
3.Distress	6.Exempt	9.

Verified **5 Public Record**

1.Buyer	4.Agent	7.Family
2.Seller	5.Pub Rec	8.Other
3.Lender	6.MLS	9.

Assessment Record

Year	Land	Buildings	Exempt	Total
2007	30,349	0	0	30,349
2008	30,349	0	0	30,349
2009	30,025	0	0	30,025
2010	30,025	0	0	30,025
2011	30,025	0	0	30,025
2012	30,025	0	0	30,025
2013	30,025	0	0	30,025
2014	30,025	0	0	30,025
2015	30,025	0	0	30,025
2016	30,025	0	0	30,025
2017	30,025	0	0	30,025
2018	30,025	0	0	30,025
2019	47,400	119,700	0	167,100
2020	47,400	139,300	0	186,700

Land Data

Front Foot	Type	Effective Frontage	Effective Depth	Influence Factor	Influence Code
11.1-100				%	
12.101-200				%	
13.201+				%	
14.				%	
15.				%	
				%	
				%	
Square Foot		**Square Feet**			
16.Regular Lot				%	
17.Secondary Lot				%	
18.Excess Land				%	
19.Condominium				%	
20.Miscellaneous				%	
				%	
				%	
Fract. Acre		**Acreage/Sites**			
21.Houselot (Frac	24	1.00	100	%	0
22.Baselot(Fract)	26	0.81	100	%	0
23.	44	1.00	100	%	0
Acres				%	
24.Houselot				%	
25.Baselot				%	
26.Rear 1				%	
27.Rear 2				%	
28.Rear 3				%	
29.Rear 4				%	

Total Acreage 1.81

Influence Codes

1.Unimproved
2.Excess Frtg
3.Topography
4.Size/Shape
5.Access
6.Restriction
7.Right of Way
8.View/Environ
9.Fract Share
Acres
30.Frontage 1
31.Frontage 2
32.Tillable
33.Tillable
34.Softwood F&O
35.Mixed Wood F&O
36.Hardwood F&O
37.Softwood TG
38.Mixed Wood TG
39.Hardwood TG
40.Wasteland
41.Gravel Pit
42.Mobile Home Si
43.Camp Site
44.Lot Improvemen
45.Access Right
46.Golf Course

Litchfield

Map Lot R12-022-3 | Account 2620 | Location 44 OVERLOOK DRIVE | Card 1 Of 1 | 11/24/2020

Building Style **2 Ranch**		
0.Uncoded	4.Cape	8.Log
1.Conv.	5.Garrison	9.Other
2.Ranch	6.Split	10.Tri-Lev
3.R Ranch	7.Contemp	11.Earth O
Dwelling Units **1**		
Other Units **0**		
Stories **1 One Story**		
1.1	4.1.5	7.1.25
2.2	5.1.75	8.3.5
3.3	6.2.5	9.4
Exterior Walls **2 Vinyl**		
0.Uncoded	4.Asbestos	8.Concrete
1.Wd Clapb	5.Stucco	9.Other
2.Vinyl	6.Brick	10.Wd shin
3.Compos.	7.Stone	11.T1-11
Roof Surface **1 Asphalt Shingles**		
1.Asphalt	4.Composit	7.Rolled R
2.Slate	5.Wood	8.
3.Metal	6.Other	9.
SF Masonry Trim **0**		
OPEN-3-CUSTOM **0**		
OPEN-4-CUSTOM **0**		
Year Built **2019**		
Year Remodeled **0**		
Foundation **5 Concrete Slab**		
1.Concrete	4.Wood	7.
2.C Block	5.Slab	8.
3.Br/Stone	6.Piers	9.
Basement **9 No Basement**		
1.1/4 Bmt	4.Full Bmt	7.
2.1/2 Bmt	5.Crawl Sp	8.
3.3/4 Bmt	6.	9.None
Bsmt Gar # Cars **0**		
Wet Basement **9 No Basement**		
1.Dry	4.Dirt Flr	7.
2.Damp	5.	8.
3.Wet	6.	9.

SF Bsmt Living **0**		
Fin Bsmt Grade **0 0**		
OPEN-5-CUSTOMIZE **0**		
Heat Type **100%** **11 Radiant Heat**		
0.Uncoded	4.Steam	8.Fl/Wall
1.HWBB	5.FWA	9.No Heat
2.HWCI	6.GravWA	10.Radiant
3.H Pump	7.Electric	11.Radiant
Cool Type **0%** **9 None**		
1.Refrig	4.W&C Air	7.RadHW
2.Evapor	5.Monitor-	8.
3.H Pump	6.Monitor-	9.None
Kitchen Style **2 Typical**		
1.Modern	4.Obsolete	7.
2.Typical	5.	8.
3.Old Type	6.	9.None
Bath(s) Style **2 Typical Bath(s)**		
1.Modern	4.Obsolete	7.
2.Typical	5.	8.
3.Old Type	6.	9.None
# Rooms **0**		
# Bedrooms **0**		
# Full Baths **2**		
# Half Baths **0**		
# Addn Fixtures **0**		
# Fireplaces **0**		

TRIO Software
A Division of Harris Computer Systems

Layout **1 Typical**		
1.Typical	4.	7.
2.Inadeq	5.	8.
3.	6.	9.
Attic **9 None**		
1.1/4 Fin	4.Full Fin	7.
2.1/2 Fin	5.Fl/Stair	8.
3.3/4 Fin	6.	9.None
Insulation **1 Full**		
1.Full	4.Minimal	7.
2.Heavy	5.Partial	8.
3.Capped	6.	9.None
Unfinished % **0%**		
Grade & Factor **3 Average 100%**		
1.E Grade	4.B Grade	7.AAA Grad
2.D Grade	5.A Grade	8.M&S
3.C Grade	6.AA Grade	9.Same
SQFT (Footprint) **1232**		
Condition **4 Average**		
1.Poor	4.Avg	7.V G
2.Fair	5.Avg+	8.Exc
3.Avg-	6.Good	9.Same
Phys. % Good **0%**		
Funct. % Good **100%**		
Functional Code **9 None**		
1.Incomp	4.Delap	7.No Power
2.O-Built	5.Bsmt	8.LongTerm
3.Damage	6.Common	9.None
Econ. % Good **100%**		
Economic Code **None**		
0.None	3.No Power	9.None
1.Location	4.Generate	8.
2.Encroach	5.Multi-Fa	9.
Entrance Code **3 Information Only**		
1.Interior	4.Vacant	7.
2.Refusal	5.Estimate	8.
3.Informed	6.Existing	9.
Information Code **4 Agent**		
1.Owner	4.Agent	7.Vacant
2.Relative	5.Estimate	8.
3.Tenant	6.Other	9.

Date Inspected 10/09/2018

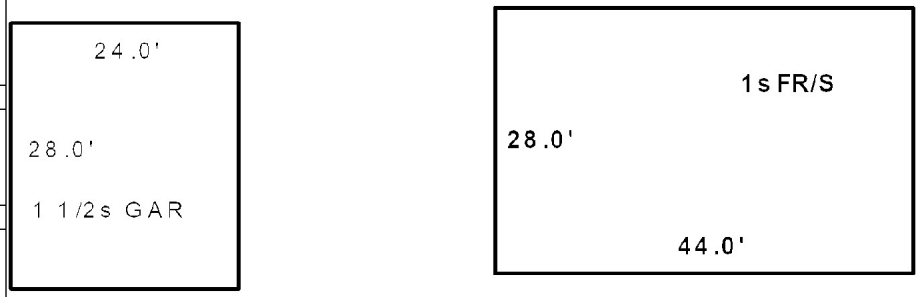

Additions, Outbuildings & Improvements

Type	Year	Units	Grade	Cond	Phys.	Funct.	Sound Value
73 1 1/2s Garage	2020	672	0 0	0	0 %	0 %	
					%	%	
					%	%	
					%	%	
					%	%	
					%	%	
					%	%	
					%	%	
					%	%	
					%	%	

1.One Story Fram
2.Two Story Fram
3.Three Story Fr
4.1 & 1/2 Story
5.1 & 3/4 Story
6.2 & 1/2 Story
21.Open Frame Por
22.Encl Frame Por
23.Frame Garage
24.Frame Shed
25.Frame Bay Wind
26.1SFr Overhang
27.Unfin Basement
28.Unfinished Att
29.Finished Attic

Map Lot R12-022-4 Account 2621 Location 54 OVERLOOK DRIVE Card 1 Of 1 11/24/2020

LAVERDIERE JEFFREY S
LAVERDIERE ELIZABETH A
115 OVERLOOK DRIVE
LITCHFIELD ME 04350

B8169P283 B9547P338 B9547P340

Previous Owner
HALLMARK HOMES CORP
P O BOX 113

TOPSHAM ME 04086
Sale Date: 10/30/2007

Previous Owner
DUBE GLEN E
118 JORDAN BRIDGE ROAD

SABATTUS ME 04280
Sale Date: 10/30/2007

Inspection Witnessed By:

X Date

No./Date	Description	Date Insp.

Notes:

Property Data

Neighborhood **153 Overlook Drive**

Tree Growth Year **0**

X Coordinate **0**

Y Coordinate **0**

Zone/Land Use **11 Residential**

Secondary Zone

Topography **2 Rolling**

1.Level	4.Below St	7.Res Protec
2.Rolling	5.Low	8.
3.Above St	6.Swampy	9.

Utilities **4 Drilled Well** **6 Septic System**

1.Public	4.Dr Well	7.Cesspool
2.Water	5.Dug Well	8.Lake/Pond
3.Sewer	6.Septic	9.None

Street **1 Paved**

1.Paved	4.Proposed	7.
2.Semi Imp	5.R/O/W	8.
3.Gravel	6.	9.None

0

0

Sale Data

Sale Date **10/30/2007**

Price **206,795**

Sale Type **2 Land & Buildings**

1.Land	4.MFG UNIT	7.
2.L & B	5.Other	8.
3.Building	6.	9.

Financing **9 Unknown**

1.Convent	4.Seller	7.
2.FHA/VA	5.Private	8.
3.Assumed	6.Cash	9.Unknown

Validity **1 Arms Length Sale**

1.Valid	4.Split	7.Renovate
2.Related	5.Partial	8.Other
3.Distress	6.Exempt	9.

Verified **5 Public Record**

1.Buyer	4.Agent	7.Family
2.Seller	5.Pub Rec	8.Other
3.Lender	6.MLS	9.

Assessment Record

Year	Land	Buildings	Exempt	Total
2007	42,813	143,593	0	186,406
2008	42,813	143,593	0	186,406
2009	42,425	215,497	0	257,922
2010	42,425	142,082	0	184,507
2011	42,425	126,556	0	168,981
2012	42,425	126,556	0	168,981
2013	42,425	125,212	0	167,637
2014	42,425	125,196	0	167,621
2015	42,425	123,851	0	166,276
2016	42,425	123,851	0	166,276
2017	42,425	122,507	0	164,932
2018	42,425	122,491	0	164,916
2019	47,900	148,400	0	196,300
2020	47,900	148,400	0	196,300

Land Data

Front Foot

11.1-100
12.101-200
13.201+
14.
15.

Square Foot

16.Regular Lot
17.Secondary Lot
18.Excess Land
19.Condominium
20.Miscellaneous

Fract. Acre

21.Houselot (Frac
22.Baselot(Fract)
23.

Acres

24.Houselot
25.Baselot
26.Rear 1
27.Rear 2
28.Rear 3
29.Rear 4

Type	Effective Frontage	Effective Depth	Influence Factor	Influence Code
			%	
			%	
			%	
			%	
			%	
			%	
			%	
Square Feet				
			%	
			%	
			%	
			%	
			%	
			%	
			%	
Acreage/Sites				
24	1.00	100	%	0
26	0.97	100	%	0
44	1.00	100	%	0
			%	
			%	
			%	
			%	

Total Acreage 1.97

Influence Codes

1.Unimproved
2.Excess Frtg
3.Topography
4.Size/Shape
5.Access
6.Restriction
7.Right of Way
8.View/Environ
9.Fract Share

Acres

30.Frontage 1
31.Frontage 2
32.Tillable
33.Tillable
34.Softwood F&O
35.Mixed Wood F&O
36.Hardwood F&O
37.Softwood TG
38.Mixed Wood TG
39.Hardwood TG
40.Wasteland
41.Gravel Pit
42.Mobile Home Si
43.Camp Site
44.Lot Improvemen
45.Access Right
46.Golf Course

Litchfield

Litchfield

Map Lot R12-022-4 | Account 2621 | Location 54 OVERLOOK DRIVE | Card 1 Of 1 | 11/24/2020

Building Style **1 Conventional**		
0.Uncoded	4.Cape	8.Log
1.Conv.	5.Garrison	9.Other
2.Ranch	6.Split	10.Tri-Lev
3.R Ranch	7.Contemp	11.Earth O
Dwelling Units **1**		
Other Units **0**		
Stories **4 One & 1/2 Story**		
1.1	4.1.5	7.1.25
2.2	5.1.75	8.3.5
3.3	6.2.5	9.4
Exterior Walls **2 Vinyl**		
0.Uncoded	4.Asbestos	8.Concrete
1.Wd Clapb	5.Stucco	9.Other
2.Vinyl	6.Brick	10.Wd shin
3.Compos.	7.Stone	11.T1-11
Roof Surface **1 Asphalt Shingles**		
1.Asphalt	4.Composit	7.Rolled R
2.Slate	5.Wood	8.
3.Metal	6.Other	9.
SF Masonry Trim **0**		
OPEN-3-CUSTOM **0**		
OPEN-4-CUSTOM **0**		
Year Built **2007**		
Year Remodeled **0**		
Foundation **1 Concrete**		
1.Concrete	4.Wood	7.
2.C Block	5.Slab	8.
3.Br/Stone	6.Piers	9.
Basement **4 Full Basement**		
1.1/4 Bmt	4.Full Bmt	7.
2.1/2 Bmt	5.Crawl Sp	8.
3.3/4 Bmt	6.	9.None
Bsmt Gar # Cars **0**		
Wet Basement **1 Dry Basement**		
1.Dry	4.Dirt Flr	7.
2.Damp	5.	8.
3.Wet	6.	9.

SF Bsmt Living **504**		
Fin Bsmt Grade **3 100**		
OPEN-5-CUSTOMIZE **0**		
Heat Type **100%** **5 Forced Warm Air**		
0.Uncoded	4.Steam	8.Fl/Wall
1.HWBB	5.FWA	9.No Heat
2.HWCI	6.GravWA	10.Radiant
3.H Pump	7.Electric	11.Radiant
Cool Type **0%** **9 None**		
1.Refrig	4.W&C Air	7.RadHW
2.Evapor	5.Monitor-	8.
3.H Pump	6.Monitor-	9.None
Kitchen Style **2 Typical**		
1.Modern	4.Obsolete	7.
2.Typical	5.	8.
3.Old Type	6.	9.None
Bath(s) Style **2 Typical Bath(s)**		
1.Modern	4.Obsolete	7.
2.Typical	5.	8.
3.Old Type	6.	9.None
# Rooms **7**		
# Bedrooms **3**		
# Full Baths **2**		
# Half Baths **0**		
# Addn Fixtures **0**		
# Fireplaces **0**		

TRIO Software
A Division of Harris Computer Systems

Layout **1 Typical**		
1.Typical	4.	7.
2.Inadeq	5.	8.
3.	6.	9.
Attic **9 None**		
1.1/4 Fin	4.Full Fin	7.
2.1/2 Fin	5.Fl/Stair	8.
3.3/4 Fin	6.	9.None
Insulation **1 Full**		
1.Full	4.Minimal	7.
2.Heavy	5.Partial	8.
3.Capped	6.	9.None
Unfinished % **0%**		
Grade & Factor **3 Average 100%**		
1.E Grade	4.B Grade	7.AAA Grad
2.D Grade	5.A Grade	8.M&S
3.C Grade	6.AA Grade	9.Same
SQFT (Footprint) **1008**		
Condition **4 Average**		
1.Poor	4.Avg	7.V G
2.Fair	5.Avg+	8.Exc
3.Avg-	6.Good	9.Same
Phys. % Good **0%**		
Funct. % Good **100%**		
Functional Code **9 None**		
1.Incomp	4.Delap	7.No Power
2.O-Built	5.Bsmt	8.LongTerm
3.Damage	6.Common	9.None
Econ. % Good **100%**		
Economic Code **None**		
0.None	3.No Power	9.None
1.Location	4.Generate	8.
2.Encroach	5.Multi-Fa	9.
Entrance Code **5 Estimated**		
1.Interior	4.Vacant	7.
2.Refusal	5.Estimate	8.
3.Informed	6.Existing	9.
Information Code **5 Estimate**		
1.Owner	4.Agent	7.Vacant
2.Relative	5.Estimate	8.
3.Tenant	6.Other	9.

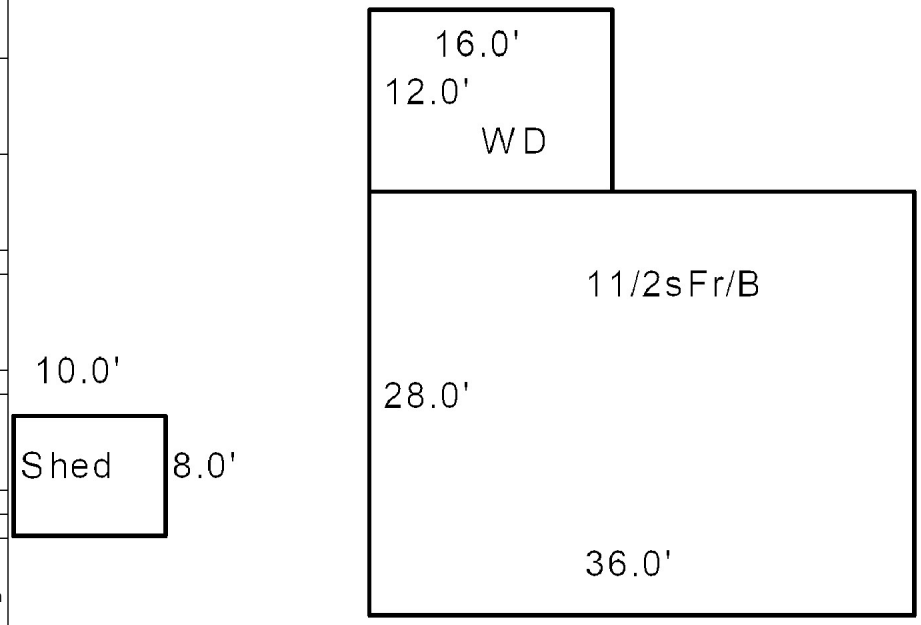

Date Inspected 10/09/2018

Additions, Outbuildings & Improvements

Type	Year	Units	Grade	Cond	Phys.	Funct.	Sound Value
68 Wood Deck/s	0	192	0 0	0	0 %	0 %	
24 Frame Shed	0				%	%	300
					%	%	
					%	%	
					%	%	
					%	%	
					%	%	
					%	%	
					%	%	
					%	%	

1.One Story Fram
2.Two Story Fram
3.Three Story Fr
4.1 & 1/2 Story
5.1 & 3/4 Story
6.2 & 1/2 Story
21.Open Frame Por
22.Encl Frame Por
23.Frame Garage
24.Frame Shed
25.Frame Bay Wind
26.1SFr Overhang
27.Unfin Basement
28.Unfinished Att
29.Finished Attic

Map Lot R12-022-5 | Account 2622 | Location 55 OVERLOOK DRIVE | Card 1 Of 1 | 11/24/2020

ROSSIGNOL ERIC J
ROSSIGNOL, SHERRY D
55 OVERLOOK DRIVE
LITCHFIELD ME 04350

B9927P38 B13503P205

Previous Owner
RAITT JERAMIAH J
56 FROST HILL AVENUE

LISBON FALLS ME 04252
Sale Date: 12/10/2008

Previous Owner
DUBE GLEN E
118 JORDAN BRIDGE ROAD

SABATTUS ME 04280
Sale Date: 9/13/2007

Inspection Witnessed By:

X Date

No./Date	Description	Date Insp.

Notes:
12/5/2012 - PERMIT DATED 4/10/2012 FOR A 10X10 GREENHOUSE. $3,000.

Litchfield

Property Data

Neighborhood **153 Overlook Drive**

Tree Growth Year **0**

X Coordinate **0**

Y Coordinate **0**

Zone/Land Use **11 Residential**

Secondary Zone

Topography **2 Rolling**

1.Level	4.Below St	7.Res Protec
2.Rolling	5.Low	8.
3.Above St	6.Swampy	9.

Utilities **4 Drilled Well** **6 Septic System**

1.Public	4.Dr Well	7.Cesspool
2.Water	5.Dug Well	8.Lake/Pond
3.Sewer	6.Septic	9.None

Street **1 Paved**

1.Paved	4.Proposed	7.
2.Semi Imp	5.R/O/W	8.
3.Gravel	6.	9.None

0

0

Sale Data

Sale Date **12/10/2008**

Price **35,000**

Sale Type **1 Land Only**

1.Land	4.MFG UNIT	7.
2.L & B	5.Other	8.
3.Building	6.	9.

Financing **6 Cash Sale**

1.Convent	4.Seller	7.
2.FHA/VA	5.Private	8.
3.Assumed	6.Cash	9.Unknown

Validity **1 Arms Length Sale**

1.Valid	4.Split	7.Renovate
2.Related	5.Partial	8.Other
3.Distress	6.Exempt	9.

Verified **5 Public Record**

1.Buyer	4.Agent	7.Family
2.Seller	5.Pub Rec	8.Other
3.Lender	6.MLS	9.

Assessment Record

Year	Land	Buildings	Exempt	Total
2007	28,609	0	0	28,609
2008	28,609	0	0	28,609
2009	40,525	125,706	0	166,231
2010	40,525	132,582	0	173,107
2011	40,525	128,115	0	168,640
2012	40,525	128,115	0	168,640
2013	40,525	126,970	0	167,495
2014	40,525	126,753	0	167,278
2015	40,525	125,607	0	166,132
2016	40,525	125,390	0	165,915
2017	40,525	124,245	0	164,770
2018	40,525	124,026	0	164,551
2019	45,600	149,800	0	195,400
2020	45,600	149,800	0	195,400

Land Data

Front Foot

11.1-100
12.101-200
13.201+
14.
15.

Square Foot

16.Regular Lot
17.Secondary Lot
18.Excess Land
19.Condominium
20.Miscellaneous

Fract. Acre

21.Houselot (Frac
22.Baselot(Fract)
23.

Acres

24.Houselot
25.Baselot
26.Rear 1
27.Rear 2
28.Rear 3
29.Rear 4

Type	Effective Frontage	Effective Depth	Influence Factor	Influence Code
			%	
			%	
			%	
			%	
			%	
			%	
			%	
	Square Feet			
			%	
			%	
			%	
			%	
			%	
			%	
			%	
	Acreage/Sites			
24	1.00	100	%	0
26	0.21	100	%	0
44	1.00	100	%	0
			%	
			%	
			%	
			%	

Total Acreage 1.21

Influence Codes

1.Unimproved
2.Excess Frtg
3.Topography
4.Size/Shape
5.Access
6.Restriction
7.Right of Way
8.View/Environ
9.Fract Share

Acres

30.Frontage 1
31.Frontage 2
32.Tillable
33.Tillable
34.Softwood F&O
35.Mixed Wood F&O
36.Hardwood F&O
37.Softwood TG
38.Mixed Wood TG
39.Hardwood TG
40.Wasteland
41.Gravel Pit
42.Mobile Home Si
43.Camp Site
44.Lot Improvemen
45.Access Right
46.Golf Course

Litchfield

Map Lot R12-022-5 | Account 2622 | Location 55 OVERLOOK DRIVE | Card 1 Of 1 | 11/24/2020

Building Style **1 Conventional**		
0.Uncoded	4.Cape	8.Log
1.Conv.	5.Garrison	9.Other
2.Ranch	6.Split	10.Tri-Lev
3.R Ranch	7.Contemp	11.Earth O
Dwelling Units **1**		
Other Units **0**		
Stories **2 Two Story**		
1.1	4.1.5	7.1.25
2.2	5.1.75	8.3.5
3.3	6.2.5	9.4
Exterior Walls **2 Vinyl**		
0.Uncoded	4.Asbestos	8.Concrete
1.Wd Clapb	5.Stucco	9.Other
2.Vinyl	6.Brick	10.Wd shin
3.Compos.	7.Stone	11.T1-11
Roof Surface **1 Asphalt Shingles**		
1.Asphalt	4.Composit	7.Rolled R
2.Slate	5.Wood	8.
3.Metal	6.Other	9.
SF Masonry Trim **0**		
OPEN-3-CUSTOM **0**		
OPEN-4-CUSTOM **0**		
Year Built **2009**		
Year Remodeled **0**		
Foundation **1 Concrete**		
1.Concrete	4.Wood	7.
2.C Block	5.Slab	8.
3.Br/Stone	6.Piers	9.
Basement **4 Full Basement**		
1.1/4 Bmt	4.Full Bmt	7.
2.1/2 Bmt	5.Crawl Sp	8.
3.3/4 Bmt	6.	9.None
Bsmt Gar # Cars **0**		
Wet Basement **1 Dry Basement**		
1.Dry	4.Dirt Flr	7.
2.Damp	5.	8.
3.Wet	6.	9.

SF Bsmt Living **0**		
Fin Bsmt Grade **0 0**		
OPEN-5-CUSTOMIZE **0**		
Heat Type **100%** **1 Hot Water BB**		
0.Uncoded	4.Steam	8.Fl/Wall
1.HWBB	5.FWA	9.No Heat
2.HWCI	6.GravWA	10.Radiant
3.H Pump	7.Electric	11.Radiant
Cool Type **0%** **9 None**		
1.Refrig	4.W&C Air	7.RadHW
2.Evapor	5.Monitor-	8.
3.H Pump	6.Monitor-	9.None
Kitchen Style **2 Typical**		
1.Modern	4.Obsolete	7.
2.Typical	5.	8.
3.Old Type	6.	9.None
Bath(s) Style **2 Typical Bath(s)**		
1.Modern	4.Obsolete	7.
2.Typical	5.	8.
3.Old Type	6.	9.None
# Rooms **5**		
# Bedrooms **3**		
# Full Baths **2**		
# Half Baths **1**		
# Addn Fixtures **0**		
# Fireplaces **0**		

TRIO Software
A Division of Harris Computer Systems

Layout **1 Typical**		
1.Typical	4.	7.
2.Inadeq	5.	8.
3.	6.	9.
Attic **9 None**		
1.1/4 Fin	4.Full Fin	7.
2.1/2 Fin	5.Fl/Stair	8.
3.3/4 Fin	6.	9.None
Insulation **1 Full**		
1.Full	4.Minimal	7.
2.Heavy	5.Partial	8.
3.Capped	6.	9.None
Unfinished % **0%**		
Grade & Factor **3 Average 100%**		
1.E Grade	4.B Grade	7.AAA Grad
2.D Grade	5.A Grade	8.M&S
3.C Grade	6.AA Grade	9.Same
SQFT (Footprint) **784**		
Condition **4 Average**		
1.Poor	4.Avg	7.V G
2.Fair	5.Avg+	8.Exc
3.Avg-	6.Good	9.Same
Phys. % Good **0%**		
Funct. % Good **100%**		
Functional Code **9 None**		
1.Incomp	4.Delap	7.No Power
2.O-Built	5.Bsmt	8.LongTerm
3.Damage	6.Common	9.None
Econ. % Good **100%**		
Economic Code **None**		
0.None	3.No Power	9.None
1.Location	4.Generate	8.
2.Encroach	5.Multi-Fa	9.
Entrance Code **3 Information Only**		
1.Interior	4.Vacant	7.
2.Refusal	5.Estimate	8.
3.Informed	6.Existing	9.
Information Code **1 Owner**		
1.Owner	4.Agent	7.Vacant
2.Relative	5.Estimate	8.
3.Tenant	6.Other	9.

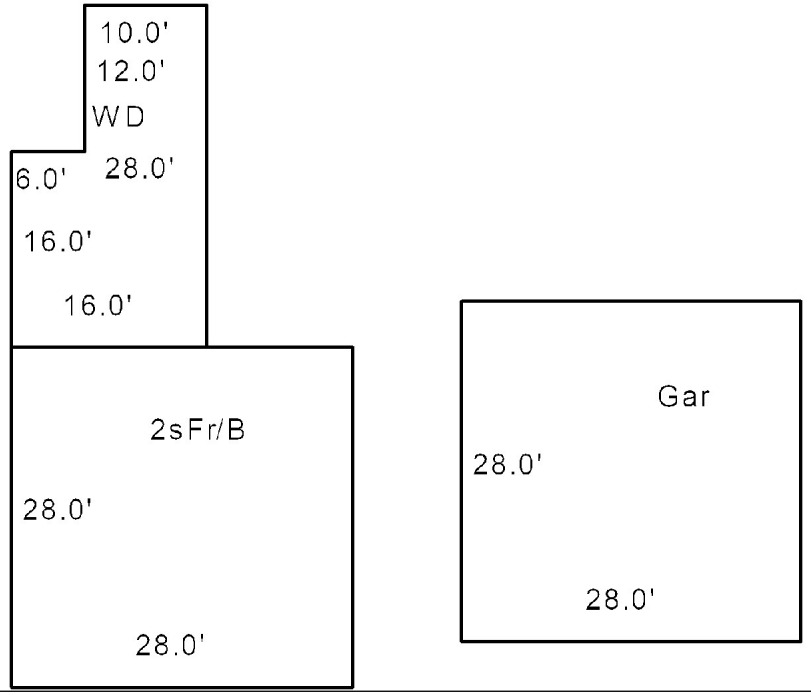

Date Inspected 10/09/2018

Additions, Outbuildings & Improvements

Type	Year	Units	Grade	Cond	Phys.	Funct.	Sound Value
68 Wood Deck/s	0	376	0 0	0	0 %	0 %	
23 Frame Garage	2010	784	3 100	4	0 %	100 %	
					%	%	
					%	%	
					%	%	
					%	%	
					%	%	
					%	%	
					%	%	
					%	%	

1.One Story Fram
2.Two Story Fram
3.Three Story Fr
4.1 & 1/2 Story
5.1 & 3/4 Story
6.2 & 1/2 Story
21.Open Frame Por
22.Encl Frame Por
23.Frame Garage
24.Frame Shed
25.Frame Bay Wind
26.1SFr Overhang
27.Unfin Basement
28.Unfinished Att
29.Finished Attic

Map Lot R12-022-6 Account 2623 Location 51 OVERLOOK DRIVE Card 1 Of 1 11/24/2020

TURCOTTE, RICHARD J SR
TURCOTTE, EILEEN Y
P.O. BOX 247
LITCHFIELD ME 04350

B8169P283 B9679P243 B10210P91 B12480P60

Previous Owner
MCFARREN, KEITH E & JUNE A MCFARREN
51 OVERLOOK DRIVE

LITCHFIELD ME 04350
Sale Date: 11/30/2016

Previous Owner
RAITT JERAMIAH J
56 FROST HILL AVENUE

LISBON FALLS ME 04252
Sale Date: 9/14/2009

Previous Owner
RAITT ALBERT W
RAITT CAROLINE A
196 WORSTER ROAD
ELIOT ME 03903
Sale Date: 3/28/2008

Inspection Witnessed By:

X Date

No./Date	Description	Date Insp.

Notes:

Litchfield

Property Data

Neighborhood **153 Overlook Drive**

Tree Growth Year **0**

X Coordinate **0**

Y Coordinate **0**

Zone/Land Use **11 Residential**

Secondary Zone

Topography **2 Rolling**

1.Level	4.Below St	7.Res Protec
2.Rolling	5.Low	8.
3.Above St	6.Swampy	9.

Utilities **4 Drilled Well** **6 Septic System**

1.Public	4.Dr Well	7.Cesspool
2.Water	5.Dug Well	8.Lake/Pond
3.Sewer	6.Septic	9.None

Street **1 Paved**

1.Paved	4.Proposed	7.
2.Semi Imp	5.R/O/W	8.
3.Gravel	6.	9.None

0

0

Sale Data

Sale Date **11/30/2016**

Price **207,000**

Sale Type **2 Land & Buildings**

1.Land	4.MFG UNIT	7.
2.L & B	5.Other	8.
3.Building	6.	9.

Financing **9 Unknown**

1.Convent	4.Seller	7.
2.FHA/VA	5.Private	8.
3.Assumed	6.Cash	9.Unknown

Validity **1 Arms Length Sale**

1.Valid	4.Split	7.Renovate
2.Related	5.Partial	8.Other
3.Distress	6.Exempt	9.

Verified **5 Public Record**

1.Buyer	4.Agent	7.Family
2.Seller	5.Pub Rec	8.Other
3.Lender	6.MLS	9.

Assessment Record

Year	Land	Buildings	Exempt	Total
2007	28,696	0	0	28,696
2008	28,696	0	0	28,696
2009	28,600	162,799	0	191,399
2010	28,600	135,902	10,000	154,502
2011	40,600	111,919	10,000	142,519
2012	40,600	111,919	10,000	142,519
2013	40,600	110,889	10,000	141,489
2014	40,600	110,889	10,000	141,489
2015	40,600	109,860	10,000	140,460
2016	40,600	109,698	15,000	135,298
2017	40,600	108,669	0	149,269
2018	40,600	108,669	0	149,269
2019	45,700	135,700	0	181,400
2020	45,700	135,700	31,000	150,400

Land Data

Front Foot

11.1-100
12.101-200
13.201+
14.
15.

Square Foot

16.Regular Lot
17.Secondary Lot
18.Excess Land
19.Condominium
20.Miscellaneous

Fract. Acre

21.Houselot (Frac
22.Baselot(Fract)
23.

Acres

24.Houselot
25.Baselot
26.Rear 1
27.Rear 2
28.Rear 3
29.Rear 4

Type	Effective Frontage	Effective Depth	Influence Factor	Influence Code
			%	
			%	
			%	
			%	
			%	
			%	
			%	
Square Feet				
			%	
			%	
			%	
			%	
			%	
			%	
			%	
Acreage/Sites				
24	1.00	100	%	0
26	0.24	100	%	0
44	1.00	100	%	0
			%	
			%	
			%	
			%	

Total Acreage 1.24

Influence Codes

1.Unimproved
2.Excess Frtg
3.Topography
4.Size/Shape
5.Access
6.Restriction
7.Right of Way
8.View/Environ
9.Fract Share

Acres

30.Frontage 1
31.Frontage 2
32.Tillable
33.Tillable
34.Softwood F&O
35.Mixed Wood F&O
36.Hardwood F&O
37.Softwood TG
38.Mixed Wood TG
39.Hardwood TG
40.Wasteland
41.Gravel Pit
42.Mobile Home Si
43.Camp Site
44.Lot Improvemen
45.Access Right
46.Golf Course

Litchfield

Map Lot R12-022-6 | Account 2623 | Location 51 OVERLOOK DRIVE | Card 1 Of 1 | 11/24/2020

Building Style **2 Ranch**		
0.Uncoded	4.Cape	8.Log
1.Conv.	5.Garrison	9.Other
2.Ranch	6.Split	10.Tri-Lev
3.R Ranch	7.Contemp	11.Earth O
Dwelling Units **1**		
Other Units **0**		
Stories **1 One Story**		
1.1	4.1.5	7.1.25
2.2	5.1.75	8.3.5
3.3	6.2.5	9.4
Exterior Walls **2 Vinyl**		
0.Uncoded	4.Asbestos	8.Concrete
1.Wd Clapb	5.Stucco	9.Other
2.Vinyl	6.Brick	10.Wd shin
3.Compos.	7.Stone	11.T1-11
Roof Surface **1 Asphalt Shingles**		
1.Asphalt	4.Composit	7.Rolled R
2.Slate	5.Wood	8.
3.Metal	6.Other	9.
SF Masonry Trim **0**		
OPEN-3-CUSTOM **0**		
OPEN-4-CUSTOM **0**		
Year Built **2009**		
Year Remodeled **0**		
Foundation **5 Concrete Slab**		
1.Concrete	4.Wood	7.
2.C Block	5.Slab	8.
3.Br/Stone	6.Piers	9.
Basement **9 No Basement**		
1.1/4 Bmt	4.Full Bmt	7.
2.1/2 Bmt	5.Crawl Sp	8.
3.3/4 Bmt	6.	9.None
Bsmt Gar # Cars **0**		
Wet Basement **9 No Basement**		
1.Dry	4.Dirt Flr	7.
2.Damp	5.	8.
3.Wet	6.	9.

SF Bsmt Living **0**		
Fin Bsmt Grade **0 0**		
OPEN-5-CUSTOMIZE **0**		
Heat Type **100%**	**10 Radiant Heat - 1st level**	
0.Uncoded	4.Steam	8.Fl/Wall
1.HWBB	5.FWA	9.No Heat
2.HWCI	6.GravWA	10.Radiant
3.H Pump	7.Electric	11.Radiant
Cool Type **0%**	**9 None**	
1.Refrig	4.W&C Air	7.RadHW
2.Evapor	5.Monitor-	8.
3.H Pump	6.Monitor-	9.None
Kitchen Style **2 Typical**		
1.Modern	4.Obsolete	7.
2.Typical	5.	8.
3.Old Type	6.	9.None
Bath(s) Style **2 Typical Bath(s)**		
1.Modern	4.Obsolete	7.
2.Typical	5.	8.
3.Old Type	6.	9.None
# Rooms **3**		
# Bedrooms **2**		
# Full Baths **2**		
# Half Baths **0**		
# Addn Fixtures **0**		
# Fireplaces **0**		

TRIO Software
A Division of Harris Computer Systems

Layout **1 Typical**		
1.Typical	4.	7.
2.Inadeq	5.	8.
3.	6.	9.
Attic **9 None**		
1.1/4 Fin	4.Full Fin	7.
2.1/2 Fin	5.Fl/Stair	8.
3.3/4 Fin	6.	9.None
Insulation **1 Full**		
1.Full	4.Minimal	7.
2.Heavy	5.Partial	8.
3.Capped	6.	9.None
Unfinished % **0%**		
Grade & Factor **3 Average 100%**		
1.E Grade	4.B Grade	7.AAA Grad
2.D Grade	5.A Grade	8.M&S
3.C Grade	6.AA Grade	9.Same
SQFT (Footprint) **1296**		
Condition **4 Average**		
1.Poor	4.Avg	7.V G
2.Fair	5.Avg+	8.Exc
3.Avg-	6.Good	9.Same
Phys. % Good **0%**		
Funct. % Good **100%**		
Functional Code **9 None**		
1.Incomp	4.Delap	7.No Power
2.O-Built	5.Bsmt	8.LongTerm
3.Damage	6.Common	9.None
Econ. % Good **100%**		
Economic Code **None**		
0.None	3.No Power	9.None
1.Location	4.Generate	8.
2.Encroach	5.Multi-Fa	9.
Entrance Code **5 Estimated**		
1.Interior	4.Vacant	7.
2.Refusal	5.Estimate	8.
3.Informed	6.Existing	9.
Information Code **5 Estimate**		
1.Owner	4.Agent	7.Vacant
2.Relative	5.Estimate	8.
3.Tenant	6.Other	9.

Date Inspected 10/09/2018

Additions, Outbuildings & Improvements

Type	Year	Units	Grade	Cond	Phys.	Funct.	Sound Value
23 Frame Garage	0	816	0 0	0	0 %	0 %	
68 Wood Deck/s	2016	100	3 100	4	0 %	100 %	
24 Frame Shed	0				%	%	1,000
					%	%	
					%	%	
					%	%	
					%	%	
					%	%	
					%	%	
					%	%	

1.One Story Fram
2.Two Story Fram
3.Three Story Fr
4.1 & 1/2 Story
5.1 & 3/4 Story
6.2 & 1/2 Story
21.Open Frame Por
22.Encl Frame Por
23.Frame Garage
24.Frame Shed
25.Frame Bay Wind
26.1SFr Overhang
27.Unfin Basement
28.Unfinished Att
29.Finished Attic

Map Lot R12-022-7 Account 2624 Location 31 OVERLOOK DRIVE Card 1 Of 1 11/24/2020

PESCE, LOLA ROAN
31 OVERLOOK DRIVE
LITCHFIELD ME 04350

B12934P131

Previous Owner
DUBE, GLEN E.
P O BOX 819

SABATTUS ME 04280
Sale Date: 6/11/2018

Previous Owner
LAND TREE CORP
P O BOX 3346

AUBURN ME 04212 3346
Sale Date: 3/23/2018

Previous Owner
DUBE GLEN E
118 JORDAN BRIDGE ROAD

SABATTUS ME 04280
Sale Date: 1/13/2010

Inspection Witnessed By:

X Date

No./Date	Description	Date Insp.

Notes:

Property Data

Neighborhood **153 Overlook Drive**

Tree Growth Year **0**

X Coordinate **0**

Y Coordinate **0**

Zone/Land Use **11 Residential**

Secondary Zone

Topography **2 Rolling**

1.Level	4.Below St	7.Res Protec
2.Rolling	5.Low	8.
3.Above St	6.Swampy	9.

Utilities **4 Drilled Well** **6 Septic System**

1.Public	4.Dr Well	7.Cesspool
2.Water	5.Dug Well	8.Lake/Pond
3.Sewer	6.Septic	9.None

Street **1 Paved**

1.Paved	4.Proposed	7.
2.Semi Imp	5.R/O/W	8.
3.Gravel	6.	9.None

0

0

Sale Data

Sale Date **6/11/2018**

Price **191,400**

Sale Type **2 Land & Buildings**

1.Land	4.MFG UNIT	7.
2.L & B	5.Other	8.
3.Building	6.	9.

Financing **9 Unknown**

1.Convent	4.Seller	7.
2.FHA/VA	5.Private	8.
3.Assumed	6.Cash	9.Unknown

Validity **1 Arms Length Sale**

1.Valid	4.Split	7.Renovate
2.Related	5.Partial	8.Other
3.Distress	6.Exempt	9.

Verified **5 Public Record**

1.Buyer	4.Agent	7.Family
2.Seller	5.Pub Rec	8.Other
3.Lender	6.MLS	9.

Assessment Record

Year	Land	Buildings	Exempt	Total
2007	28,986	0	0	28,986
2008	28,986	0	0	28,986
2009	28,850	0	0	28,850
2010	28,850	0	0	28,850
2011	28,850	0	0	28,850
2012	28,850	0	0	28,850
2013	28,850	0	0	28,850
2014	28,850	0	0	28,850
2015	28,850	0	0	28,850
2016	28,850	0	0	28,850
2017	28,850	0	0	28,850
2018	28,850	0	0	28,850
2019	46,000	131,900	0	177,900
2020	46,000	131,900	25,000	152,900

Land Data

Front Foot

11.1-100
12.101-200
13.201+
14.
15.

Square Foot

16.Regular Lot
17.Secondary Lot
18.Excess Land
19.Condominium
20.Miscellaneous

Fract. Acre

21.Houselot (Frac
22.Baselot(Fract)
23.

Acres

24.Houselot
25.Baselot
26.Rear 1
27.Rear 2
28.Rear 3
29.Rear 4

Type	Effective Frontage	Effective Depth	Influence Factor	Influence Code
			%	
			%	
			%	
			%	
			%	
			%	
			%	
	Square Feet			
			%	
			%	
			%	
			%	
			%	
			%	
			%	
	Acreage/Sites			
24	1.00	100	%	0
26	0.34	100	%	0
44	1.00	100	%	0
			%	
			%	
			%	
			%	

Total Acreage 1.34

Influence Codes

1.Unimproved
2.Excess Frtg
3.Topography
4.Size/Shape
5.Access
6.Restriction
7.Right of Way
8.View/Environ
9.Fract Share

Acres

30.Frontage 1
31.Frontage 2
32.Tillable
33.Tillable
34.Softwood F&O
35.Mixed Wood F&O
36.Hardwood F&O
37.Softwood TG
38.Mixed Wood TG
39.Hardwood TG
40.Wasteland
41.Gravel Pit
42.Mobile Home Si
43.Camp Site
44.Lot Improvemen
45.Access Right
46.Golf Course

Litchfield

Litchfield

Map Lot R12-022-7 | Account 2624 | Location 31 OVERLOOK DRIVE | Card 1 Of 1 | 11/24/2020

Building Style **2 Ranch**		
0.Uncoded	4.Cape	8.Log
1.Conv.	5.Garrison	9.Other
2.Ranch	6.Split	10.Tri-Lev
3.R Ranch	7.Contemp	11.Earth O
Dwelling Units **1**		
Other Units **0**		
Stories **1 One Story**		
1.1	4.1.5	7.1.25
2.2	5.1.75	8.3.5
3.3	6.2.5	9.4
Exterior Walls **2 Vinyl**		
0.Uncoded	4.Asbestos	8.Concrete
1.Wd Clapb	5.Stucco	9.Other
2.Vinyl	6.Brick	10.Wd shin
3.Compos.	7.Stone	11.T1-11
Roof Surface **1 Asphalt Shingles**		
1.Asphalt	4.Composit	7.Rolled R
2.Slate	5.Wood	8.
3.Metal	6.Other	9.
SF Masonry Trim **0**		
OPEN-3-CUSTOM **0**		
OPEN-4-CUSTOM **0**		
Year Built **2018**		
Year Remodeled **0**		
Foundation **5 Concrete Slab**		
1.Concrete	4.Wood	7.
2.C Block	5.Slab	8.
3.Br/Stone	6.Piers	9.
Basement **9 No Basement**		
1.1/4 Bmt	4.Full Bmt	7.
2.1/2 Bmt	5.Crawl Sp	8.
3.3/4 Bmt	6.	9.None
Bsmt Gar # Cars **0**		
Wet Basement **9 No Basement**		
1.Dry	4.Dirt Flr	7.
2.Damp	5.	8.
3.Wet	6.	9.

SF Bsmt Living **0**		
Fin Bsmt Grade **0 0**		
OPEN-5-CUSTOMIZE **0**		
Heat Type **100%**	**11 Radiant Heat**	
0.Uncoded	4.Steam	8.Fl/Wall
1.HWBB	5.FWA	9.No Heat
2.HWCI	6.GravWA	10.Radiant
3.H Pump	7.Electric	11.Radiant
Cool Type **0%**	**9 None**	
1.Refrig	4.W&C Air	7.RadHW
2.Evapor	5.Monitor-	8.
3.H Pump	6.Monitor-	9.None
Kitchen Style **2 Typical**		
1.Modern	4.Obsolete	7.
2.Typical	5.	8.
3.Old Type	6.	9.None
Bath(s) Style **2 Typical Bath(s)**		
1.Modern	4.Obsolete	7.
2.Typical	5.	8.
3.Old Type	6.	9.None
# Rooms **4**		
# Bedrooms **2**		
# Full Baths **2**		
# Half Baths **0**		
# Addn Fixtures **0**		
# Fireplaces **0**		

TRIO Software
A Division of Harris Computer Systems

Layout **1 Typical**		
1.Typical	4.	7.
2.Inadeq	5.	8.
3.	6.	9.
Attic **9 None**		
1.1/4 Fin	4.Full Fin	7.
2.1/2 Fin	5.Fl/Stair	8.
3.3/4 Fin	6.	9.None
Insulation **1 Full**		
1.Full	4.Minimal	7.
2.Heavy	5.Partial	8.
3.Capped	6.	9.None
Unfinished % **0%**		
Grade & Factor **3 Average 100%**		
1.E Grade	4.B Grade	7.AAA Grad
2.D Grade	5.A Grade	8.M&S
3.C Grade	6.AA Grade	9.Same
SQFT (Footprint) **1232**		
Condition **4 Average**		
1.Poor	4.Avg	7.V G
2.Fair	5.Avg+	8.Exc
3.Avg-	6.Good	9.Same
Phys. % Good **0%**		
Funct. % Good **100%**		
Functional Code **9 None**		
1.Incomp	4.Delap	7.No Power
2.O-Built	5.Bsmt	8.LongTerm
3.Damage	6.Common	9.None
Econ. % Good **100%**		
Economic Code **None**		
0.None	3.No Power	9.None
1.Location	4.Generate	8.
2.Encroach	5.Multi-Fa	9.
Entrance Code **1 Interior Inspect**		
1.Interior	4.Vacant	7.
2.Refusal	5.Estimate	8.
3.Informed	6.Existing	9.
Information Code **1 Owner**		
1.Owner	4.Agent	7.Vacant
2.Relative	5.Estimate	8.
3.Tenant	6.Other	9.

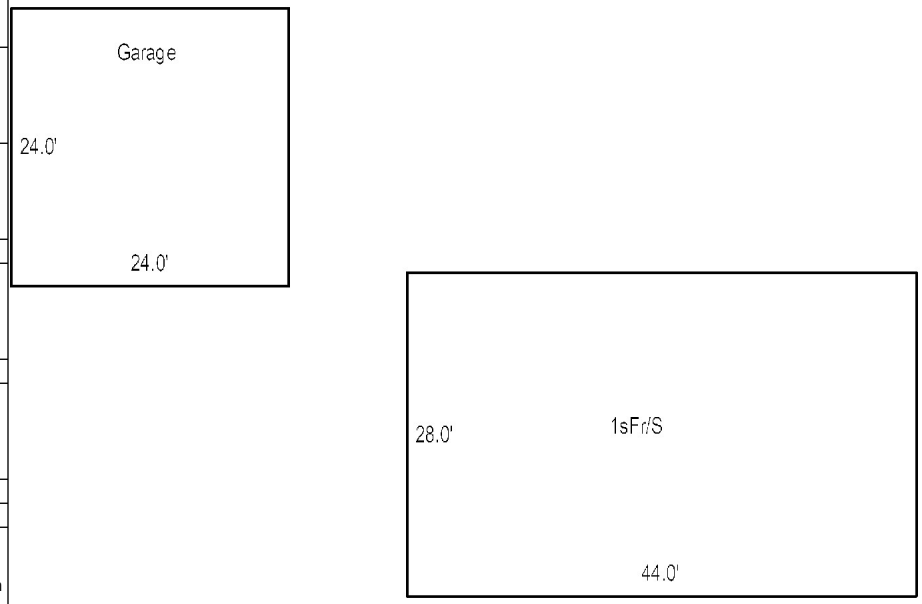

Date Inspected 10/08/2018

Additions, Outbuildings & Improvements

Type	Year	Units	Grade	Cond	Phys.	Funct.	Sound Value
23 Frame Garage	2018	576	3 100	4	0 %	100 %	
					%	%	
					%	%	
					%	%	
					%	%	
					%	%	
					%	%	
					%	%	
					%	%	
					%	%	

1.One Story Fram
2.Two Story Fram
3.Three Story Fr
4.1 & 1/2 Story
5.1 & 3/4 Story
6.2 & 1/2 Story
21.Open Frame Por
22.Encl Frame Por
23.Frame Garage
24.Frame Shed
25.Frame Bay Wind
26.1SFr Overhang
27.Unfin Basement
28.Unfinished Att
29.Finished Attic

Map Lot R12-022-8 | Account 2625 | Location 12 VICTORIA DRIVE | Card 1 Of 1 | 11/24/2020

LAPIERRE, ALEX P
HUSTON, HALEY C
12 VICTORIA DRIVE
LITCHFIELD ME 04350

B13464P204

Previous Owner
DUBE GLEN E
P O BOX 819

SABATTUS ME 04280
Sale Date: 1/29/2020

Property Data

Neighborhood	**153 Overlook Drive**
Tree Growth Year	**0**
X Coordinate	**0**
Y Coordinate	**0**
Zone/Land Use	**11 Residential**
Secondary Zone	
Topography	**2 Rolling**

1.Level	4.Below St	7.Res Protec
2.Rolling	5.Low	8.
3.Above St	6.Swampy	9.

Utilities **4 Drilled Well** **6 Septic System**

1.Public	4.Dr Well	7.Cesspool
2.Water	5.Dug Well	8.Lake/Pond
3.Sewer	6.Septic	9.None

Street **2 Semi-Improved**

1.Paved	4.Proposed	7.
2.Semi Imp	5.R/O/W	8.
3.Gravel	6.	9.None

0
0

Sale Data

Sale Date	**1/29/2020**
Price	**183,000**
Sale Type	**2 Land & Buildings**

1.Land	4.MFG UNIT	7.
2.L & B	5.Other	8.
3.Building	6.	9.

Financing **9 Unknown**

1.Convent	4.Seller	7.
2.FHA/VA	5.Private	8.
3.Assumed	6.Cash	9.Unknown

Validity **1 Arms Length Sale**

1.Valid	4.Split	7.Renovate
2.Related	5.Partial	8.Other
3.Distress	6.Exempt	9.

Verified **5 Public Record**

1.Buyer	4.Agent	7.Family
2.Seller	5.Pub Rec	8.Other
3.Lender	6.MLS	9.

Assessment Record

Year	Land	Buildings	Exempt	Total
2007	28,029	0	0	28,029
2008	28,029	0	0	28,029
2009	28,025	0	0	28,025
2010	28,025	0	0	28,025
2011	28,025	0	0	28,025
2012	28,025	0	0	28,025
2013	28,025	0	0	28,025
2014	28,025	0	0	28,025
2015	28,025	0	0	28,025
2016	28,025	0	0	28,025
2017	28,025	0	0	28,025
2018	28,025	0	0	28,025
2019	25,000	0	0	25,000
2020	45,000	119,700	0	164,700

Land Data

Front Foot

11.1-100
12.101-200
13.201+
14.
15.

Square Foot

16.Regular Lot
17.Secondary Lot
18.Excess Land
19.Condominium
20.Miscellaneous

Fract. Acre

21.Houselot (Frac
22.Baselot(Fract)
23.

Acres

24.Houselot
25.Baselot
26.Rear 1
27.Rear 2
28.Rear 3
29.Rear 4

Type	Effective Frontage	Effective Depth	Influence Factor	Influence Code
			%	
			%	
			%	
			%	
			%	
			%	
			%	
Square Feet				
			%	
			%	
			%	
			%	
			%	
			%	
			%	
Acreage/Sites				
24	1.00	100	%	0
26	0.01	100	%	0
44	1.00	100	%	0
			%	
			%	
			%	
			%	

Total Acreage 1.01

Influence Codes

1.Unimproved
2.Excess Frtg
3.Topography
4.Size/Shape
5.Access
6.Restriction
7.Right of Way
8.View/Environ
9.Fract Share

Acres

30.Frontage 1
31.Frontage 2
32.Tillable
33.Tillable
34.Softwood F&O
35.Mixed Wood F&O
36.Hardwood F&O
37.Softwood TG
38.Mixed Wood TG
39.Hardwood TG
40.Wasteland
41.Gravel Pit
42.Mobile Home Si
43.Camp Site
44.Lot Improvemen
45.Access Right
46.Golf Course

Inspection Witnessed By:

X Date

No./Date	Description	Date Insp.

Notes:
'20 New House & Lot Imps

Litchfield

Litchfield

Map Lot R12-022-8 | Account 2625 | Location 12 VICTORIA DRIVE | Card 1 Of 1 | 11/24/2020

Building Style **2 Ranch**		
0.Uncoded	4.Cape	8.Log
1.Conv.	5.Garrison	9.Other
2.Ranch	6.Split	10.Tri-Lev
3.R Ranch	7.Contemp	11.Earth O
Dwelling Units **1**		
Other Units **0**		
Stories **1 One Story**		
1.1	4.1.5	7.1.25
2.2	5.1.75	8.3.5
3.3	6.2.5	9.4
Exterior Walls **2 Vinyl**		
0.Uncoded	4.Asbestos	8.Concrete
1.Wd Clapb	5.Stucco	9.Other
2.Vinyl	6.Brick	10.Wd shin
3.Compos.	7.Stone	11.T1-11
Roof Surface **1 Asphalt Shingles**		
1.Asphalt	4.Composit	7.Rolled R
2.Slate	5.Wood	8.
3.Metal	6.Other	9.
SF Masonry Trim **0**		
OPEN-3-CUSTOM **0**		
OPEN-4-CUSTOM **0**		
Year Built **2019**		
Year Remodeled **0**		
Foundation **5 Concrete Slab**		
1.Concrete	4.Wood	7.
2.C Block	5.Slab	8.
3.Br/Stone	6.Piers	9.
Basement **9 No Basement**		
1.1/4 Bmt	4.Full Bmt	7.
2.1/2 Bmt	5.Crawl Sp	8.
3.3/4 Bmt	6.	9.None
Bsmt Gar # Cars **0**		
Wet Basement **9 No Basement**		
1.Dry	4.Dirt Flr	7.
2.Damp	5.	8.
3.Wet	6.	9.

SF Bsmt Living **0**		
Fin Bsmt Grade **0 0**		
OPEN-5-CUSTOMIZE **0**		
Heat Type **100%**	**10 Radiant Heat - 1st level**	
0.Uncoded	4.Steam	8.Fl/Wall
1.HWBB	5.FWA	9.No Heat
2.HWCI	6.GravWA	10.Radiant
3.H Pump	7.Electric	11.Radiant
Cool Type **0%**	**9 None**	
1.Refrig	4.W&C Air	7.RadHW
2.Evapor	5.Monitor-	8.
3.H Pump	6.Monitor-	9.None
Kitchen Style **2 Typical**		
1.Modern	4.Obsolete	7.
2.Typical	5.	8.
3.Old Type	6.	9.None
Bath(s) Style **2 Typical Bath(s)**		
1.Modern	4.Obsolete	7.
2.Typical	5.	8.
3.Old Type	6.	9.None
# Rooms **0**		
# Bedrooms **3**		
# Full Baths **2**		
# Half Baths **0**		
# Addn Fixtures **0**		
# Fireplaces **0**		

TRIO Software
A Division of Harris Computer Systems

Layout **1 Typical**		
1.Typical	4.	7.
2.Inadeq	5.	8.
3.	6.	9.
Attic **9 None**		
1.1/4 Fin	4.Full Fin	7.
2.1/2 Fin	5.Fl/Stair	8.
3.3/4 Fin	6.	9.None
Insulation **1 Full**		
1.Full	4.Minimal	7.
2.Heavy	5.Partial	8.
3.Capped	6.	9.None
Unfinished % **0%**		
Grade & Factor **3 Average 100%**		
1.E Grade	4.B Grade	7.AAA Grad
2.D Grade	5.A Grade	8.M&S
3.C Grade	6.AA Grade	9.Same
SQFT (Footprint) **1232**		
Condition **4 Average**		
1.Poor	4.Avg	7.V G
2.Fair	5.Avg+	8.Exc
3.Avg-	6.Good	9.Same
Phys. % Good **0%**		
Funct. % Good **100%**		
Functional Code **9 None**		
1.Incomp	4.Delap	7.No Power
2.O-Built	5.Bsmt	8.LongTerm
3.Damage	6.Common	9.None
Econ. % Good **100%**		
Economic Code **None**		
0.None	3.No Power	9.None
1.Location	4.Generate	8.
2.Encroach	5.Multi-Fa	9.
Entrance Code **0**		
1.Interior	4.Vacant	7.
2.Refusal	5.Estimate	8.
3.Informed	6.Existing	9.
Information Code **0**		
1.Owner	4.Agent	7.Vacant
2.Relative	5.Estimate	8.
3.Tenant	6.Other	9.

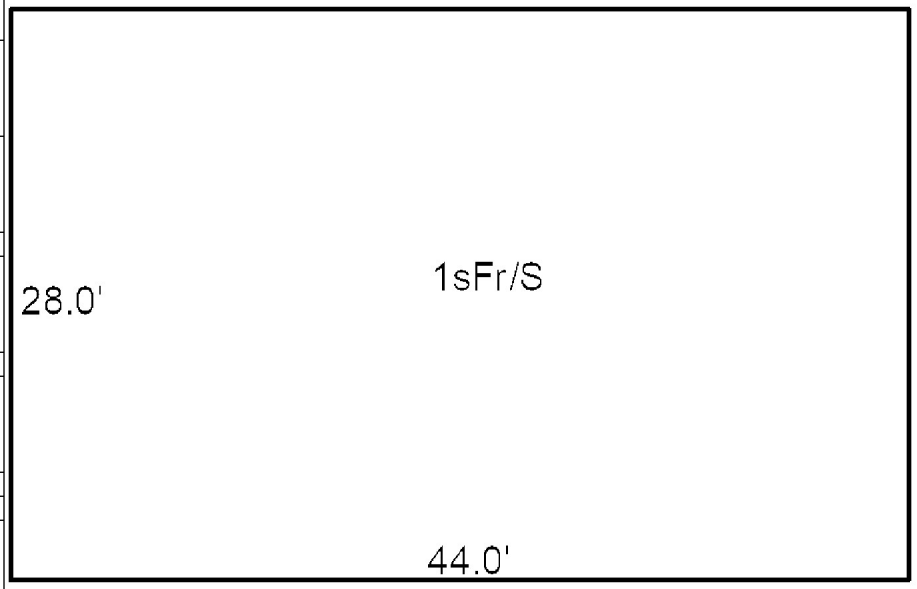

Date Inspected

Additions, Outbuildings & Improvements

Type	Year	Units	Grade	Cond	Phys.	Funct.	Sound Value
					%	%	
					%	%	
					%	%	
					%	%	
					%	%	
					%	%	
					%	%	
					%	%	
					%	%	
					%	%	

1.One Story Fram
2.Two Story Fram
3.Three Story Fr
4.1 & 1/2 Story
5.1 & 3/4 Story
6.2 & 1/2 Story
21.Open Frame Por
22.Encl Frame Por
23.Frame Garage
24.Frame Shed
25.Frame Bay Wind
26.1SFr Overhang
27.Unfin Basement
28.Unfinished Att
29.Finished Attic

Map Lot R12-022-9 | Account 2626 | Location 39 OVERLOOK DRIVE | Card 1 Of 1 | 11/24/2020

LENIHAN, PRISCILLA A
HOPKINS, MATTHEW G
39 OVERLOOK DR
LITCHFIELD ME 04350

B13027P181

Previous Owner
DUBE, GLEN E.
P O BOX 819

SABATTUS ME 04280
Sale Date: 9/14/2018

Previous Owner
LAND TREE CORP
P O BOX 3346

AUBURN ME 04212
Sale Date: 6/11/2018

Previous Owner
DUBE GLEN E
118 JORDAN BRIDGE ROAD

SABATTUS ME 04280
Sale Date: 1/13/2010

Inspection Witnessed By:

X Date

No./Date	Description	Date Insp.

Notes:

Litchfield

Property Data

Neighborhood **153 Overlook Drive**

Tree Growth Year **0**

X Coordinate **0**

Y Coordinate **0**

Zone/Land Use **11 Residential**

Secondary Zone

Topography **2 Rolling**

1.Level	4.Below St	7.Res Protec
2.Rolling	5.Low	8.
3.Above St	6.Swampy	9.

Utilities **4 Drilled Well** **6 Septic System**

1.Public	4.Dr Well	7.Cesspool
2.Water	5.Dug Well	8.Lake/Pond
3.Sewer	6.Septic	9.None

Street **3 Gravel**

1.Paved	4.Proposed	7.
2.Semi Imp	5.R/O/W	8.
3.Gravel	6.	9.None

0

0

Sale Data

Sale Date **9/14/2018**

Price **186,400**

Sale Type **2 Land & Buildings**

1.Land	4.MFG UNIT	7.
2.L & B	5.Other	8.
3.Building	6.	9.

Financing **9 Unknown**

1.Convent	4.Seller	7.
2.FHA/VA	5.Private	8.
3.Assumed	6.Cash	9.Unknown

Validity **1 Arms Length Sale**

1.Valid	4.Split	7.Renovate
2.Related	5.Partial	8.Other
3.Distress	6.Exempt	9.

Verified **5 Public Record**

1.Buyer	4.Agent	7.Family
2.Seller	5.Pub Rec	8.Other
3.Lender	6.MLS	9.

Assessment Record

Year	Land	Buildings	Exempt	Total
2007	28,058	0	0	28,058
2008	28,058	0	0	28,058
2009	28,050	0	0	28,050
2010	28,050	0	0	28,050
2011	28,050	0	0	28,050
2012	28,050	0	0	28,050
2013	28,050	0	0	28,050
2014	28,050	0	0	28,050
2015	28,050	0	0	28,050
2016	28,050	0	0	28,050
2017	28,050	0	0	28,050
2018	28,050	0	0	28,050
2019	45,100	133,300	0	178,400
2020	45,100	133,300	25,000	153,400

Land Data

Front Foot

11.1-100
12.101-200
13.201+
14.
15.

Square Foot

16.Regular Lot
17.Secondary Lot
18.Excess Land
19.Condominium
20.Miscellaneous

Fract. Acre

21.Houselot (Frac
22.Baselot(Fract)
23.

Acres

24.Houselot
25.Baselot
26.Rear 1
27.Rear 2
28.Rear 3
29.Rear 4

Type	Effective Frontage	Effective Depth	Influence Factor	Influence Code
			%	
			%	
			%	
			%	
			%	
			%	
			%	
Square Feet				
			%	
			%	
			%	
			%	
			%	
			%	
			%	
Acreage/Sites				
24	1.00	100	%	0
26	0.02	100	%	0
44	1.00	100	%	0
			%	
			%	
			%	
			%	

Total Acreage 1.02

Influence Codes

1.Unimproved
2.Excess Frtg
3.Topography
4.Size/Shape
5.Access
6.Restriction
7.Right of Way
8.View/Environ
9.Fract Share

Acres

30.Frontage 1
31.Frontage 2
32.Tillable
33.Tillable
34.Softwood F&O
35.Mixed Wood F&O
36.Hardwood F&O
37.Softwood TG
38.Mixed Wood TG
39.Hardwood TG
40.Wasteland
41.Gravel Pit
42.Mobile Home Si
43.Camp Site
44.Lot Improvemen
45.Access Right
46.Golf Course

Litchfield

Map Lot R12-022-9 | Account 2626 | Location 39 OVERLOOK DRIVE | Card 1 Of 1 | 11/24/2020

Building Style **2 Ranch**		
0.Uncoded	4.Cape	8.Log
1.Conv.	5.Garrison	9.Other
2.Ranch	6.Split	10.Tri-Lev
3.R Ranch	7.Contemp	11.Earth O
Dwelling Units **1**		
Other Units **0**		
Stories **1 One Story**		
1.1	4.1.5	7.1.25
2.2	5.1.75	8.3.5
3.3	6.2.5	9.4
Exterior Walls **2 Vinyl**		
0.Uncoded	4.Asbestos	8.Concrete
1.Wd Clapb	5.Stucco	9.Other
2.Vinyl	6.Brick	10.Wd shin
3.Compos.	7.Stone	11.T1-11
Roof Surface **1 Asphalt Shingles**		
1.Asphalt	4.Composit	7.Rolled R
2.Slate	5.Wood	8.
3.Metal	6.Other	9.
SF Masonry Trim **0**		
OPEN-3-CUSTOM **0**		
OPEN-4-CUSTOM **0**		
Year Built **2019**		
Year Remodeled **0**		
Foundation **5 Concrete Slab**		
1.Concrete	4.Wood	7.
2.C Block	5.Slab	8.
3.Br/Stone	6.Piers	9.
Basement **9 No Basement**		
1.1/4 Bmt	4.Full Bmt	7.
2.1/2 Bmt	5.Crawl Sp	8.
3.3/4 Bmt	6.	9.None
Bsmt Gar # Cars **0**		
Wet Basement **9 No Basement**		
1.Dry	4.Dirt Flr	7.
2.Damp	5.	8.
3.Wet	6.	9.

SF Bsmt Living **0**		
Fin Bsmt Grade **0 0**		
OPEN-5-CUSTOMIZE **0**		
Heat Type **100%** **11 Radiant Heat**		
0.Uncoded	4.Steam	8.Fl/Wall
1.HWBB	5.FWA	9.No Heat
2.HWCI	6.GravWA	10.Radiant
3.H Pump	7.Electric	11.Radiant
Cool Type **0%** **9 None**		
1.Refrig	4.W&C Air	7.RadHW
2.Evapor	5.Monitor-	8.
3.H Pump	6.Monitor-	9.None
Kitchen Style **2 Typical**		
1.Modern	4.Obsolete	7.
2.Typical	5.	8.
3.Old Type	6.	9.None
Bath(s) Style **2 Typical Bath(s)**		
1.Modern	4.Obsolete	7.
2.Typical	5.	8.
3.Old Type	6.	9.None
# Rooms **0**		
# Bedrooms **0**		
# Full Baths **2**		
# Half Baths **0**		
# Addn Fixtures **0**		
# Fireplaces **0**		

TRIO Software
A Division of Harris Computer Systems

Layout **1 Typical**		
1.Typical	4.	7.
2.Inadeq	5.	8.
3.	6.	9.
Attic **9 None**		
1.1/4 Fin	4.Full Fin	7.
2.1/2 Fin	5.Fl/Stair	8.
3.3/4 Fin	6.	9.None
Insulation **1 Full**		
1.Full	4.Minimal	7.
2.Heavy	5.Partial	8.
3.Capped	6.	9.None
Unfinished % **0%**		
Grade & Factor **3 Average 100%**		
1.E Grade	4.B Grade	7.AAA Grad
2.D Grade	5.A Grade	8.M&S
3.C Grade	6.AA Grade	9.Same
SQFT (Footprint) **1232**		
Condition **4 Average**		
1.Poor	4.Avg	7.V G
2.Fair	5.Avg+	8.Exc
3.Avg-	6.Good	9.Same
Phys. % Good **0%**		
Funct. % Good **100%**		
Functional Code **9 None**		
1.Incomp	4.Delap	7.No Power
2.O-Built	5.Bsmt	8.LongTerm
3.Damage	6.Common	9.None
Econ. % Good **100%**		
Economic Code **None**		
0.None	3.No Power	9.None
1.Location	4.Generate	8.
2.Encroach	5.Multi-Fa	9.
Entrance Code **5 Estimated**		
1.Interior	4.Vacant	7.
2.Refusal	5.Estimate	8.
3.Informed	6.Existing	9.
Information Code **5 Estimate**		
1.Owner	4.Agent	7.Vacant
2.Relative	5.Estimate	8.
3.Tenant	6.Other	9.

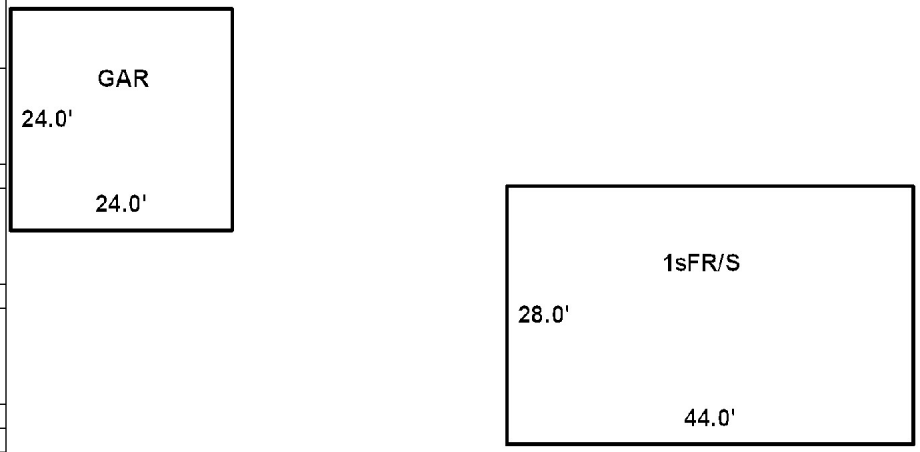

Date Inspected 10/08/2018

Additions, Outbuildings & Improvements

Type	Year	Units	Grade	Cond	Phys.	Funct.	Sound Value
23 Frame Garage	0	576	3 100	4	0 %	100 %	
					%	%	
					%	%	
					%	%	
					%	%	
					%	%	
					%	%	
					%	%	
					%	%	
					%	%	

1.One Story Fram
2.Two Story Fram
3.Three Story Fr
4.1 & 1/2 Story
5.1 & 3/4 Story
6.2 & 1/2 Story
21.Open Frame Por
22.Encl Frame Por
23.Frame Garage
24.Frame Shed
25.Frame Bay Wind
26.1SFr Overhang
27.Unfin Basement
28.Unfinished Att
29.Finished Attic

Map Lot R12-022A | Account 890 | Location 211 WHIPPOORWILL ROAD | Card 1 Of 1 | 11/24/2020

GERVAIS HOMES, LLC
52 WHITE BRIDGE ROAD
STANDISH ME 04084

B4723P269 B8765P28 B13533P198

Previous Owner
JENNINGS, HELEN MARY
JENNINGS RANDALL
4579 W FIELD STREET
HOMOSASSA FL 34446
Sale Date: 3/04/2020

Inspection Witnessed By:

X Date

No./Date	Description	Date Insp.

Notes:

Property Data

Neighborhood	**226 Whippoorwill Road**
Tree Growth Year	**0**
X Coordinate	**0**
Y Coordinate	**0**
Zone/Land Use	**11 Residential**
Secondary Zone	
Topography	**2 Rolling**

1.Level	4.Below St	7.Res Protec
2.Rolling	5.Low	8.
3.Above St	6.Swampy	9.

Utilities **4 Drilled Well** **6 Septic System**

1.Public	4.Dr Well	7.Cesspool
2.Water	5.Dug Well	8.Lake/Pond
3.Sewer	6.Septic	9.None

Street **1 Paved**

1.Paved	4.Proposed	7.
2.Semi Imp	5.R/O/W	8.
3.Gravel	6.	9.None

0

0

Sale Data

Sale Date	**3/04/2020**
Price	**54,401**
Sale Type	**2 Land & Buildings**

1.Land	4.MFG UNIT	7.
2.L & B	5.Other	8.
3.Building	6.	9.

Financing **9 Unknown**

1.Convent	4.Seller	7.
2.FHA/VA	5.Private	8.
3.Assumed	6.Cash	9.Unknown

Validity **3 Distressed Sale**

1.Valid	4.Split	7.Renovate
2.Related	5.Partial	8.Other
3.Distress	6.Exempt	9.

Verified **5 Public Record**

1.Buyer	4.Agent	7.Family
2.Seller	5.Pub Rec	8.Other
3.Lender	6.MLS	9.

Assessment Record

Year	Land	Buildings	Exempt	Total
2007	40,000	66,221	13,000	93,221
2008	40,000	66,204	12,350	93,854
2009	40,000	90,245	9,500	120,745
2010	40,000	63,154	10,000	93,154
2011	40,000	79,189	10,000	109,189
2012	40,000	79,189	10,000	109,189
2013	40,000	78,077	16,000	102,077
2014	40,000	76,935	16,000	100,935
2015	40,000	76,912	16,000	100,912
2016	40,000	75,764	21,000	94,764
2017	40,000	74,651	26,000	88,651
2018	40,000	74,596	24,960	89,636
2019	45,000	81,300	26,000	100,300
2020	45,000	81,300	31,000	95,300

Land Data

Front Foot	Type	Effective Frontage	Effective Depth	Influence Factor	Influence Code
11.1-100				%	
12.101-200				%	
13.201+				%	
14.				%	
15.				%	
				%	
				%	

Square Foot		Square Feet		
16.Regular Lot			%	
17.Secondary Lot			%	
18.Excess Land			%	
19.Condominium			%	
20.Miscellaneous			%	
			%	
			%	

Fract. Acre	Acreage/Sites			
21.Houselot (Frac	24	1.00	100 %	0
22.Baselot(Fract)	44	1.00	100 %	0
23.			%	
Acres			%	
24.Houselot			%	
25.Baselot			%	
26.Rear 1			%	
27.Rear 2			%	
28.Rear 3			%	
29.Rear 4			%	

Total Acreage 1.00

Influence Codes

1.Unimproved
2.Excess Frtg
3.Topography
4.Size/Shape
5.Access
6.Restriction
7.Right of Way
8.View/Environ
9.Fract Share

Acres

30.Frontage 1
31.Frontage 2
32.Tillable
33.Tillable
34.Softwood F&O
35.Mixed Wood F&O
36.Hardwood F&O
37.Softwood TG
38.Mixed Wood TG
39.Hardwood TG
40.Wasteland
41.Gravel Pit
42.Mobile Home Si
43.Camp Site
44.Lot Improvemen
45.Access Right
46.Golf Course

Litchfield

Litchfield

Map Lot R12-022A | Account 890 | Location 211 WHIPPOORWILL ROAD | Card 1 Of 1 | 11/24/2020

Building Style	**1 Conventional**	
0.Uncoded	4.Cape	8.Log
1.Conv.	5.Garrison	9.Other
2.Ranch	6.Split	10.Tri-Lev
3.R Ranch	7.Contemp	11.Earth O
Dwelling Units	**1**	
Other Units	**0**	
Stories	**5 One & 3/4 Story**	
1.1	4.1.5	7.1.25
2.2	5.1.75	8.3.5
3.3	6.2.5	9.4
Exterior Walls	**1 Clapboard**	
0.Uncoded	4.Asbestos	8.Concrete
1.Wd Clapb	5.Stucco	9.Other
2.Vinyl	6.Brick	10.Wd shin
3.Compos.	7.Stone	11.T1-11
Roof Surface	**3 Sheet Metal**	
1.Asphalt	4.Composit	7.Rolled R
2.Slate	5.Wood	8.
3.Metal	6.Other	9.
SF Masonry Trim	**0**	
OPEN-3-CUSTOM	**0**	
OPEN-4-CUSTOM	**0**	
Year Built	**1980**	
Year Remodeled	**0**	
Foundation	**1 Concrete**	
1.Concrete	4.Wood	7.
2.C Block	5.Slab	8.
3.Br/Stone	6.Piers	9.
Basement	**4 Full Basement**	
1.1/4 Bmt	4.Full Bmt	7.
2.1/2 Bmt	5.Crawl Sp	8.
3.3/4 Bmt	6.	9.None
Bsmt Gar # Cars	**0**	
Wet Basement	**2 Damp Basement**	
1.Dry	4.Dirt Flr	7.
2.Damp	5.	8.
3.Wet	6.	9.

SF Bsmt Living	**0**	
Fin Bsmt Grade	**0 0**	
OPEN-5-CUSTOMIZE	**0**	
Heat Type	**100%**	**5 Forced Warm Air**
0.Uncoded	4.Steam	8.Fl/Wall
1.HWBB	5.FWA	9.No Heat
2.HWCI	6.GravWA	10.Radiant
3.H Pump	7.Electric	11.Radiant
Cool Type	**0%**	**9 None**
1.Refrig	4.W&C Air	7.RadHW
2.Evapor	5.Monitor-	8.
3.H Pump	6.Monitor-	9.None
Kitchen Style	**2 Typical**	
1.Modern	4.Obsolete	7.
2.Typical	5.	8.
3.Old Type	6.	9.None
Bath(s) Style	**2 Typical Bath(s)**	
1.Modern	4.Obsolete	7.
2.Typical	5.	8.
3.Old Type	6.	9.None
# Rooms	**5**	
# Bedrooms	**2**	
# Full Baths	**1**	
# Half Baths	**1**	
# Addn Fixtures	**0**	
# Fireplaces	**0**	

TRIO Software
A Division of Harris Computer Systems

Layout	**1 Typical**	
1.Typical	4.	7.
2.Inadeq	5.	8.
3.	6.	9.
Attic	**9 None**	
1.1/4 Fin	4.Full Fin	7.
2.1/2 Fin	5.Fl/Stair	8.
3.3/4 Fin	6.	9.None
Insulation	**1 Full**	
1.Full	4.Minimal	7.
2.Heavy	5.Partial	8.
3.Capped	6.	9.None
Unfinished %	**0%**	
Grade & Factor	**2 Fair 110%**	
1.E Grade	4.B Grade	7.AAA Grad
2.D Grade	5.A Grade	8.M&S
3.C Grade	6.AA Grade	9.Same
SQFT (Footprint)	**896**	
Condition	**3 Below Average**	
1.Poor	4.Avg	7.V G
2.Fair	5.Avg+	8.Exc
3.Avg-	6.Good	9.Same
Phys. % Good	**0%**	
Funct. % Good	**100%**	
Functional Code	**9 None**	
1.Incomp	4.Delap	7.No Power
2.O-Built	5.Bsmt	8.LongTerm
3.Damage	6.Common	9.None
Econ. % Good	**100%**	
Economic Code	**None**	
0.None	3.No Power	9.None
1.Location	4.Generate	8.
2.Encroach	5.Multi-Fa	9.
Entrance Code	**4 Note left to Insp**	
1.Interior	4.Vacant	7.
2.Refusal	5.Estimate	8.
3.Informed	6.Existing	9.
Information Code	**5 Estimate**	
1.Owner	4.Agent	7.Vacant
2.Relative	5.Estimate	8.
3.Tenant	6.Other	9.

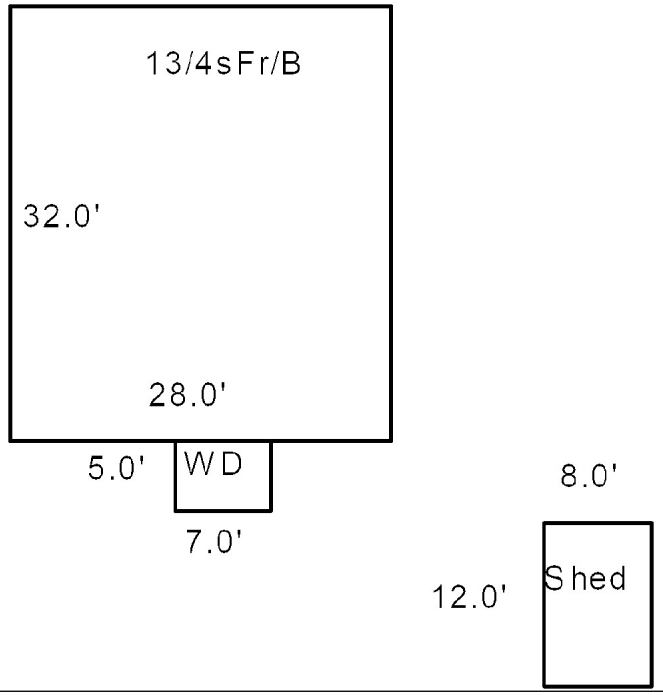

Date Inspected 10/08/2018

Additions, Outbuildings & Improvements

Type	Year	Units	Grade	Cond	Phys.	Funct.	Sound Value
24 Frame Shed	0				%	%	300
					%	%	
					%	%	
					%	%	
					%	%	
					%	%	
					%	%	
					%	%	
					%	%	
					%	%	

1.One Story Fram
2.Two Story Fram
3.Three Story Fr
4.1 & 1/2 Story
5.1 & 3/4 Story
6.2 & 1/2 Story
21.Open Frame Por
22.Encl Frame Por
23.Frame Garage
24.Frame Shed
25.Frame Bay Wind
26.1SFr Overhang
27.Unfin Basement
28.Unfinished Att
29.Finished Attic

Map Lot R12-023 Account 763 Location 44 LITTLE DRIVE Card 1 Of 1 11/24/2020

DELESKEY BRUCE
DELESKEY AUDREY
44 LITTLE DRIVE
LITCHFIELD ME 04350

B1174P80 B8668P342

Previous Owner
HARKINS MD, MICHAEL J
PO BOX 61

LITCHFIELD ME 04350
Sale Date: 10/31/2005

Inspection Witnessed By:

X Date

No./Date	Description	Date Insp.

Notes:

2/11/20 NAH EST MORE DONE.
6/6/11-PERMIT #11-037-30X40 BARN W/1.5 BATH/BUNK HSE, DRILLED WELL + SEPTIC

Litchfield

Property Data

Neighborhood **117 Little Drive**

Tree Growth Year **0**

X Coordinate **0**

Y Coordinate **0**

Zone/Land Use **11 Residential**

Secondary Zone

Topography **2 Rolling**

1.Level	4.Below St	7.Res Protec
2.Rolling	5.Low	8.
3.Above St	6.Swampy	9.

Utilities **4 Drilled Well** **6 Septic System**

1.Public	4.Dr Well	7.Cesspool
2.Water	5.Dug Well	8.Lake/Pond
3.Sewer	6.Septic	9.None

Street **3 Gravel**

1.Paved	4.Proposed	7.
2.Semi Imp	5.R/O/W	8.
3.Gravel	6.	9.None

0

0

Sale Data

Sale Date **10/31/2005**

Price **25,000**

Sale Type **1 Land Only**

1.Land	4.MFG UNIT	7.
2.L & B	5.Other	8.
3.Building	6.	9.

Financing **1 Conventional**

1.Convent	4.Seller	7.
2.FHA/VA	5.Private	8.
3.Assumed	6.Cash	9.Unknown

Validity **1 Arms Length Sale**

1.Valid	4.Split	7.Renovate
2.Related	5.Partial	8.Other
3.Distress	6.Exempt	9.

Verified **5 Public Record**

1.Buyer	4.Agent	7.Family
2.Seller	5.Pub Rec	8.Other
3.Lender	6.MLS	9.

Assessment Record

Year	Land	Buildings	Exempt	Total
2007	45,080	0	0	45,080
2008	45,080	0	0	45,080
2009	42,220	0	0	42,220
2010	42,220	0	0	42,220
2011	42,220	29,525	0	71,745
2012	42,220	29,525	0	71,745
2013	42,220	29,458	0	71,678
2014	42,220	29,458	0	71,678
2015	42,220	29,391	0	71,611
2016	42,220	29,391	0	71,611
2017	42,220	29,323	0	71,543
2018	42,220	29,323	0	71,543
2019	41,300	73,400	0	114,700
2020	41,300	78,300	0	119,600

Land Data

Front Foot	Type	Effective Frontage	Effective Depth	Influence Factor	Influence Code
11.1-100				%	
12.101-200				%	
13.201+				%	
14.				%	
15.				%	
				%	
				%	

Square Foot		Square Feet		
16.Regular Lot			%	
17.Secondary Lot			%	
18.Excess Land			%	
19.Condominium			%	
20.Miscellaneous			%	
			%	
			%	

Fract. Acre	Acreage/Sites				
21.Houselot (Frac	24	1.00	100	%	0
22.Baselot(Fract)	26	5.00	100	%	0
23.	27	1.72	100	%	0
Acres				%	
24.Houselot				%	
25.Baselot				%	
26.Rear 1				%	
27.Rear 2				%	
28.Rear 3					
29.Rear 4					

Total Acreage 7.72

Influence Codes

1.Unimproved
2.Excess Frtg
3.Topography
4.Size/Shape
5.Access
6.Restriction
7.Right of Way
8.View/Environ
9.Fract Share
Acres
30.Frontage 1
31.Frontage 2
32.Tillable
33.Tillable
34.Softwood F&O
35.Mixed Wood F&O
36.Hardwood F&O
37.Softwood TG
38.Mixed Wood TG
39.Hardwood TG
40.Wasteland
41.Gravel Pit
42.Mobile Home Si
43.Camp Site
44.Lot Improvemen
45.Access Right
46.Golf Course

Litchfield

Map Lot R12-023 | Account 763 | Location 44 LITTLE DRIVE | Card 1 Of 1 | 11/24/2020

Building Style	**1 Conventional**	
0.Uncoded	4.Cape	8.Log
1.Conv.	5.Garrison	9.Other
2.Ranch	6.Split	10.Tri-Lev
3.R Ranch	7.Contemp	11.Earth O
Dwelling Units	**1**	
Other Units	**0**	
Stories	**2 Two Story**	
1.1	4.1.5	7.1.25
2.2	5.1.75	8.3.5
3.3	6.2.5	9.4
Exterior Walls	**2 Vinyl**	
0.Uncoded	4.Asbestos	8.Concrete
1.Wd Clapb	5.Stucco	9.Other
2.Vinyl	6.Brick	10.Wd shin
3.Compos.	7.Stone	11.T1-11
Roof Surface	**1 Asphalt Shingles**	
1.Asphalt	4.Composit	7.Rolled R
2.Slate	5.Wood	8.
3.Metal	6.Other	9.
SF Masonry Trim	**0**	
OPEN-3-CUSTOM	**0**	
OPEN-4-CUSTOM	**0**	
Year Built	**2011**	
Year Remodeled	**0**	
Foundation	**5 Concrete Slab**	
1.Concrete	4.Wood	7.
2.C Block	5.Slab	8.
3.Br/Stone	6.Piers	9.
Basement	**9 No Basement**	
1.1/4 Bmt	4.Full Bmt	7.
2.1/2 Bmt	5.Crawl Sp	8.
3.3/4 Bmt	6.	9.None
Bsmt Gar # Cars	**0**	
Wet Basement	**9 No Basement**	
1.Dry	4.Dirt Flr	7.
2.Damp	5.	8.
3.Wet	6.	9.

SF Bsmt Living	**0**	
Fin Bsmt Grade	**0 0**	
OPEN-5-CUSTOMIZE	**0**	
Heat Type	**100%**	**8 Floor/Wall Unit**
0.Uncoded	4.Steam	8.Fl/Wall
1.HWBB	5.FWA	9.No Heat
2.HWCI	6.GravWA	10.Radiant
3.H Pump	7.Electric	11.Radiant
Cool Type	**0%**	**9 None**
1.Refrig	4.W&C Air	7.RadHW
2.Evapor	5.Monitor-	8.
3.H Pump	6.Monitor-	9.None
Kitchen Style	**2 Typical**	
1.Modern	4.Obsolete	7.
2.Typical	5.	8.
3.Old Type	6.	9.None
Bath(s) Style	**2 Typical Bath(s)**	
1.Modern	4.Obsolete	7.
2.Typical	5.	8.
3.Old Type	6.	9.None
# Rooms	**0**	
# Bedrooms	**0**	
# Full Baths	**0**	
# Half Baths	**0**	
# Addn Fixtures	**0**	
# Fireplaces	**0**	

TRIO Software
A Division of Harris Computer Systems

Layout	**1 Typical**	
1.Typical	4.	7.
2.Inadeq	5.	8.
3.	6.	9.
Attic	**9 None**	
1.1/4 Fin	4.Full Fin	7.
2.1/2 Fin	5.Fl/Stair	8.
3.3/4 Fin	6.	9.None
Insulation	**1 Full**	
1.Full	4.Minimal	7.
2.Heavy	5.Partial	8.
3.Capped	6.	9.None
Unfinished %	**50%**	
Grade & Factor	**2 Fair 100%**	
1.E Grade	4.B Grade	7.AAA Grad
2.D Grade	5.A Grade	8.M&S
3.C Grade	6.AA Grade	9.Same
SQFT (Footprint)	**1200**	
Condition	**4 Average**	
1.Poor	4.Avg	7.V G
2.Fair	5.Avg+	8.Exc
3.Avg-	6.Good	9.Same
Phys. % Good	**0%**	
Funct. % Good	**70%**	
Functional Code	**1 Incomplete**	
1.Incomp	4.Delap	7.No Power
2.O-Built	5.Bsmt	8.LongTerm
3.Damage	6.Common	9.None
Econ. % Good	**100%**	
Economic Code	**None**	
0.None	3.No Power	9.None
1.Location	4.Generate	8.
2.Encroach	5.Multi-Fa	9.
Entrance Code	**5 Estimated**	
1.Interior	4.Vacant	7.
2.Refusal	5.Estimate	8.
3.Informed	6.Existing	9.
Information Code	**5 Estimate**	
1.Owner	4.Agent	7.Vacant
2.Relative	5.Estimate	8.
3.Tenant	6.Other	9.

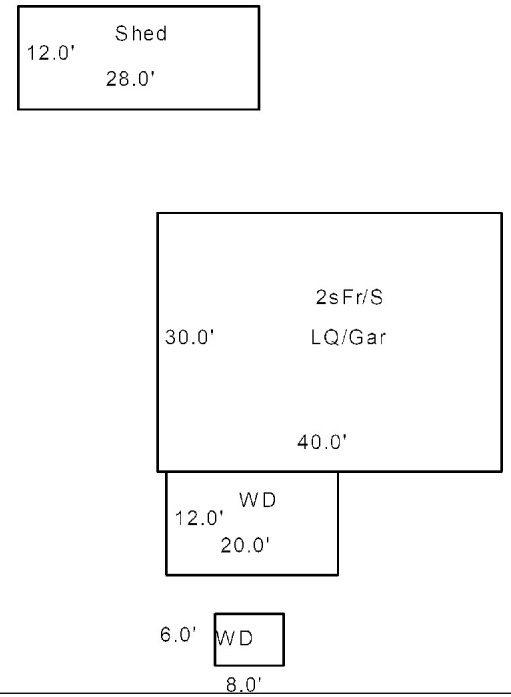

Date Inspected 10/08/2018

Additions, Outbuildings & Improvements

Type	Year	Units	Grade	Cond	Phys.	Funct.	Sound Value
68 Wood Deck/s	2012	240	3 100	4	0 %	100 %	
68 Wood Deck/s	2012	48	3 100	4	0 %	100 %	
24 Frame Shed	2017	336	2 100	4	0 %	100 %	
					%	%	
					%	%	
					%	%	
					%	%	
					%	%	
					%	%	
					%	%	

1.One Story Fram
2.Two Story Fram
3.Three Story Fr
4.1 & 1/2 Story
5.1 & 3/4 Story
6.2 & 1/2 Story
21.Open Frame Por
22.Encl Frame Por
23.Frame Garage
24.Frame Shed
25.Frame Bay Wind
26.1SFr Overhang
27.Unfin Basement
28.Unfinished Att
29.Finished Attic

Map Lot R12-024 Account 174 Location 45 PURGATORY DRIVE Card 1 Of 2 11/24/2020

BOUCHARD, RAYMOND P
BOUCHARD, SUSANNE M
P O BOX 332
LITCHFIELD ME 04350

B2586P123

Property Data

Neighborhood **172 Purgatory Drive**

Tree Growth Year **0**

X Coordinate **0**

Y Coordinate **0**

Zone/Land Use **11 Residential**

Secondary Zone

Topography **2 Rolling**

1.Level	4.Below St	7.Res Protec
2.Rolling	5.Low	8.
3.Above St	6.Swampy	9.

Utilities **4 Drilled Well** **6 Septic System**

1.Public	4.Dr Well	7.Cesspool
2.Water	5.Dug Well	8.Lake/Pond
3.Sewer	6.Septic	9.None

Street **3 Gravel**

1.Paved	4.Proposed	7.
2.Semi Imp	5.R/O/W	8.
3.Gravel	6.	9.None

0

0

Sale Data

Sale Date

Price

Sale Type

1.Land	4.MFG UNIT	7.
2.L & B	5.Other	8.
3.Building	6.	9.

Financing

1.Convent	4.Seller	7.
2.FHA/VA	5.Private	8.
3.Assumed	6.Cash	9.Unknown

Validity

1.Valid	4.Split	7.Renovate
2.Related	5.Partial	8.Other
3.Distress	6.Exempt	9.

Verified

1.Buyer	4.Agent	7.Family
2.Seller	5.Pub Rec	8.Other
3.Lender	6.MLS	9.

Assessment Record

Year	Land	Buildings	Exempt	Total
2007	118,376	129,748	19,000	229,124
2008	118,376	129,731	18,050	230,057
2009	108,720	136,179	15,200	229,699
2010	106,167	117,730	16,000	207,897
2011	106,167	133,357	16,000	223,524
2012	106,167	133,357	16,000	223,524
2013	106,167	131,274	16,000	221,441
2014	106,167	120,135	16,000	210,302
2015	106,167	120,064	16,000	210,231
2016	106,167	118,357	21,000	203,524
2017	106,167	116,702	26,000	196,869
2018	106,167	116,649	24,960	197,856
2019	93,200	132,100	26,000	199,300
2020	93,200	132,100	31,000	194,300

Land Data

Front Foot

11.1-100
12.101-200
13.201+
14.
15.

Square Foot

16.Regular Lot
17.Secondary Lot
18.Excess Land
19.Condominium
20.Miscellaneous

Fract. Acre

21.Houselot (Frac
22.Baselot(Fract)
23.

Acres

24.Houselot
25.Baselot
26.Rear 1
27.Rear 2
28.Rear 3
29.Rear 4

Type	Effective Frontage	Effective Depth	Influence Factor	Influence Code
			%	
			%	
			%	
			%	
			%	
			%	
			%	
	Square Feet			
			%	
			%	
			%	
			%	
			%	
			%	
			%	
	Acreage/Sites			
24	1.00	100	%	0
26	5.00	100	%	0
28	10.00	100	%	0
29	6.64	100	%	0
42	1.00	100	%	0
44	2.00	100	%	0
			%	

Total Acreage 22.64

Influence Codes

1.Unimproved
2.Excess Frtg
3.Topography
4.Size/Shape
5.Access
6.Restriction
7.Right of Way
8.View/Environ
9.Fract Share

Acres

30.Frontage 1
31.Frontage 2
32.Tillable
33.Tillable
34.Softwood F&O
35.Mixed Wood F&O
36.Hardwood F&O
37.Softwood TG
38.Mixed Wood TG
39.Hardwood TG
40.Wasteland
41.Gravel Pit
42.Mobile Home Si
43.Camp Site
44.Lot Improvemen
45.Access Right
46.Golf Course

Inspection Witnessed By:

X Date

No./Date	Description	Date Insp.

Notes:

10/26/10-PERMIT #10-105-MOVE ACCESS ROAD ON PROPERTY.

Litchfield

Litchfield

Map Lot R12-024 | Account 174 | Location 45 PURGATORY DRIVE | Card 1 Of 2 | 11/24/2020

Building Style	**1 Conventional**	
0.Uncoded	4.Cape	8.Log
1.Conv.	5.Garrison	9.Other
2.Ranch	6.Split	10.Tri-Lev
3.R Ranch	7.Contemp	11.Earth O
Dwelling Units	**1**	
Other Units	**0**	
Stories	**1 One Story**	
1.1	4.1.5	7.1.25
2.2	5.1.75	8.3.5
3.3	6.2.5	9.4
Exterior Walls	**9 Other**	
0.Uncoded	4.Asbestos	8.Concrete
1.Wd Clapb	5.Stucco	9.Other
2.Vinyl	6.Brick	10.Wd shin
3.Compos.	7.Stone	11.T1-11
Roof Surface	**3 Sheet Metal**	
1.Asphalt	4.Composit	7.Rolled R
2.Slate	5.Wood	8.
3.Metal	6.Other	9.
SF Masonry Trim	**0**	
OPEN-3-CUSTOM	**0**	
OPEN-4-CUSTOM	**0**	
Year Built	**1980**	
Year Remodeled	**0**	
Foundation	**1 Concrete**	
1.Concrete	4.Wood	7.
2.C Block	5.Slab	8.
3.Br/Stone	6.Piers	9.
Basement	**4 Full Basement**	
1.1/4 Bmt	4.Full Bmt	7.
2.1/2 Bmt	5.Crawl Sp	8.
3.3/4 Bmt	6.	9.None
Bsmt Gar # Cars	**2**	
Wet Basement	**1 Dry Basement**	
1.Dry	4.Dirt Flr	7.
2.Damp	5.	8.
3.Wet	6.	9.

SF Bsmt Living	**1460**	
Fin Bsmt Grade	**2 100**	
OPEN-5-CUSTOMIZE	**0**	
Heat Type	**100% 6 Gravity Warm Air**	
0.Uncoded	4.Steam	8.Fl/Wall
1.HWBB	5.FWA	9.No Heat
2.HWCI	6.GravWA	10.Radiant
3.H Pump	7.Electric	11.Radiant
Cool Type	**0% 9 None**	
1.Refrig	4.W&C Air	7.RadHW
2.Evapor	5.Monitor-	8.
3.H Pump	6.Monitor-	9.None
Kitchen Style	**2 Typical**	
1.Modern	4.Obsolete	7.
2.Typical	5.	8.
3.Old Type	6.	9.None
Bath(s) Style	**2 Typical Bath(s)**	
1.Modern	4.Obsolete	7.
2.Typical	5.	8.
3.Old Type	6.	9.None
# Rooms	**4**	
# Bedrooms	**3**	
# Full Baths	**1**	
# Half Baths	**1**	
# Addn Fixtures	**0**	
# Fireplaces	**0**	

TRIO Software
A Division of Harris Computer Systems

Layout	**1 Typical**	
1.Typical	4.	7.
2.Inadeq	5.	8.
3.	6.	9.
Attic	**9 None**	
1.1/4 Fin	4.Full Fin	7.
2.1/2 Fin	5.Fl/Stair	8.
3.3/4 Fin	6.	9.None
Insulation	**0**	
1.Full	4.Minimal	7.
2.Heavy	5.Partial	8.
3.Capped	6.	9.None
Unfinished %	**2%**	
Grade & Factor	**2 Fair 100%**	
1.E Grade	4.B Grade	7.AAA Grad
2.D Grade	5.A Grade	8.M&S
3.C Grade	6.AA Grade	9.Same
SQFT (Footprint)	**1575**	
Condition	**3 Below Average**	
1.Poor	4.Avg	7.V G
2.Fair	5.Avg+	8.Exc
3.Avg-	6.Good	9.Same
Phys. % Good	**0%**	
Funct. % Good	**100%**	
Functional Code	**9 None**	
1.Incomp	4.Delap	7.No Power
2.O-Built	5.Bsmt	8.LongTerm
3.Damage	6.Common	9.None
Econ. % Good	**100%**	
Economic Code	**None**	
0.None	3.No Power	9.None
1.Location	4.Generate	8.
2.Encroach	5.Multi-Fa	9.
Entrance Code	**3 Information Only**	
1.Interior	4.Vacant	7.
2.Refusal	5.Estimate	8.
3.Informed	6.Existing	9.
Information Code	**3 Tenant**	
1.Owner	4.Agent	7.Vacant
2.Relative	5.Estimate	8.
3.Tenant	6.Other	9.

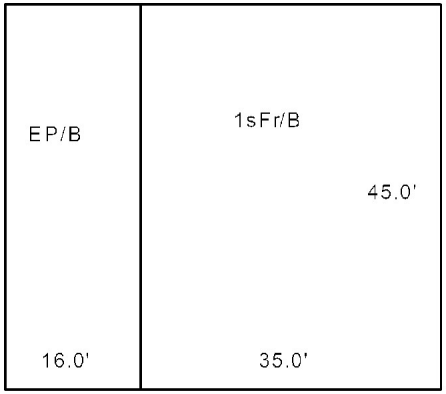

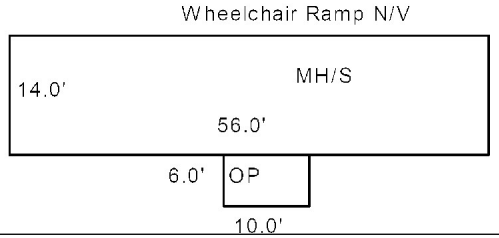

Date Inspected 10/08/2018

Additions, Outbuildings & Improvements

Type	Year	Units	Grade	Cond	Phys.	Funct.	Sound Value
22 Encl Frame	0	720	2 100	3	0 %	100 %	
27 Unfin Basement	0	720	2 100	3	0 %	100 %	
998 14 MFG UNIT	1991	14x56	2 100	3	0 %	100 %	
101 Conc Slab	1991	784	3 100	3	0 %	100 %	
21 Open Frame	1991	60	2 100	3	0 %	100 %	
					%	%	
					%	%	
					%	%	
					%	%	
					%	%	

1.One Story Fram
2.Two Story Fram
3.Three Story Fr
4.1 & 1/2 Story
5.1 & 3/4 Story
6.2 & 1/2 Story
21.Open Frame Por
22.Encl Frame Por
23.Frame Garage
24.Frame Shed
25.Frame Bay Wind
26.1SFr Overhang
27.Unfin Basement
28.Unfinished Att
29.Finished Attic

Map Lot R12-024 Account 174 Location 35 PURGATORY DRIVE Card 2 Of 2 11/24/2020

BOUCHARD, RAYMOND P
BOUCHARD, SUSANNE M
P O BOX 332
LITCHFIELD ME 04350

B2586P123

Property Data

Neighborhood **17 Purgatory Stream/Pond**

Tree Growth Year **0**

X Coordinate **0**

Y Coordinate **0**

Zone/Land Use **11 Residential**

Secondary Zone

Topography **2 Rolling**

1.Level	4.Below St	7.Res Protec
2.Rolling	5.Low	8.
3.Above St	6.Swampy	9.

Utilities **4 Drilled Well** **6 Septic System**

1.Public	4.Dr Well	7.Cesspool
2.Water	5.Dug Well	8.Lake/Pond
3.Sewer	6.Septic	9.None

Street **9 None**

1.Paved	4.Proposed	7.
2.Semi Imp	5.R/O/W	8.
3.Gravel	6.	9.None

0

0

Sale Data

Sale Date

Price

Sale Type

1.Land	4.MFG UNIT	7.
2.L & B	5.Other	8.
3.Building	6.	9.

Financing

1.Convent	4.Seller	7.
2.FHA/VA	5.Private	8.
3.Assumed	6.Cash	9.Unknown

Validity

1.Valid	4.Split	7.Renovate
2.Related	5.Partial	8.Other
3.Distress	6.Exempt	9.

Verified

1.Buyer	4.Agent	7.Family
2.Seller	5.Pub Rec	8.Other
3.Lender	6.MLS	9.

Assessment Record

Year	Land	Buildings	Exempt	Total
2007	0	120,886	0	120,886
2008	0	120,265	0	120,265
2009	0	148,027	0	148,027
2010	0	119,621	0	119,621
2011	0	144,060	0	144,060
2012	0	144,060	0	144,060
2013	0	142,645	0	142,645
2014	0	120,862	0	120,862
2015	0	120,862	0	120,862
2016	0	120,837	0	120,837
2017	0	120,837	0	120,837
2018	0	120,812	0	120,812
2019	0	75,900	0	75,900
2020	0	75,900	0	75,900

Land Data

Front Foot	Type	Effective Frontage	Effective Depth	Influence Factor	Influence Code
11.1-100				%	
12.101-200				%	
13.201+				%	
14.				%	
15.				%	
				%	
				%	
Square Foot		**Square Feet**			
16.Regular Lot				%	
17.Secondary Lot				%	
18.Excess Land				%	
19.Condominium				%	
20.Miscellaneous				%	
				%	
				%	
Fract. Acre		**Acreage/Sites**			
21.Houselot (Frac				%	
22.Baselot(Fract)				%	
23.				%	
Acres				%	
24.Houselot				%	
25.Baselot				%	
26.Rear 1				%	
27.Rear 2				%	
28.Rear 3				%	
29.Rear 4				%	

Total Acreage 0.00

Influence Codes

1.Unimproved
2.Excess Frtg
3.Topography
4.Size/Shape
5.Access
6.Restriction
7.Right of Way
8.View/Environ
9.Fract Share

Acres

30.Frontage 1
31.Frontage 2
32.Tillable
33.Tillable
34.Softwood F&O
35.Mixed Wood F&O
36.Hardwood F&O
37.Softwood TG
38.Mixed Wood TG
39.Hardwood TG
40.Wasteland
41.Gravel Pit
42.Mobile Home Si
43.Camp Site
44.Lot Improvemen
45.Access Right
46.Golf Course

Inspection Witnessed By:

X Date

No./Date	Description	Date Insp.

Notes:

'14 est complete add wd 8x28.

Litchfield

Litchfield

Map Lot R12-024 | Account 174 | Location 35 PURGATORY DRIVE | Card 2 Of 2 | 11/24/2020

Building Style	**1 Conventional**	
0.Uncoded	4.Cape	8.Log
1.Conv.	5.Garrison	9.Other
2.Ranch	6.Split	10.Tri-Lev
3.R Ranch	7.Contemp	11.Earth O
Dwelling Units	**1**	
Other Units	**0**	
Stories	**1 One Story**	
1.1	4.1.5	7.1.25
2.2	5.1.75	8.3.5
3.3	6.2.5	9.4
Exterior Walls	**2 Vinyl**	
0.Uncoded	4.Asbestos	8.Concrete
1.Wd Clapb	5.Stucco	9.Other
2.Vinyl	6.Brick	10.Wd shin
3.Compos.	7.Stone	11.T1-11
Roof Surface	**3 Sheet Metal**	
1.Asphalt	4.Composit	7.Rolled R
2.Slate	5.Wood	8.
3.Metal	6.Other	9.
SF Masonry Trim	**0**	
OPEN-3-CUSTOM	**0**	
OPEN-4-CUSTOM	**0**	
Year Built	**1**	
Year Remodeled	**1950**	
Foundation	**1 Concrete**	
1.Concrete	4.Wood	7.
2.C Block	5.Slab	8.
3.Br/Stone	6.Piers	9.
Basement	**4 Full Basement**	
1.1/4 Bmt	4.Full Bmt	7.
2.1/2 Bmt	5.Crawl Sp	8.
3.3/4 Bmt	6.	9.None
Bsmt Gar # Cars	**0**	
Wet Basement	**1 Dry Basement**	
1.Dry	4.Dirt Flr	7.
2.Damp	5.	8.
3.Wet	6.	9.

SF Bsmt Living	**0**	
Fin Bsmt Grade	**0 0**	
OPEN-5-CUSTOMIZE	**0**	
Heat Type	**100%**	**12 Monitor-Fuel Oil**
0.Uncoded	4.Steam	8.Fl/Wall
1.HWBB	5.FWA	9.No Heat
2.HWCI	6.GravWA	10.Radiant
3.H Pump	7.Electric	11.Radiant
Cool Type	**0%**	**9 None**
1.Refrig	4.W&C Air	7.RadHW
2.Evapor	5.Monitor-	8.
3.H Pump	6.Monitor-	9.None
Kitchen Style	**2 Typical**	
1.Modern	4.Obsolete	7.
2.Typical	5.	8.
3.Old Type	6.	9.None
Bath(s) Style	**2 Typical Bath(s)**	
1.Modern	4.Obsolete	7.
2.Typical	5.	8.
3.Old Type	6.	9.None
# Rooms	**3**	
# Bedrooms	**1**	
# Full Baths	**1**	
# Half Baths	**0**	
# Addn Fixtures	**0**	
# Fireplaces	**0**	

TRIO Software
A Division of Harris Computer Systems

Layout	**1 Typical**	
1.Typical	4.	7.
2.Inadeq	5.	8.
3.	6.	9.
Attic	**9 None**	
1.1/4 Fin	4.Full Fin	7.
2.1/2 Fin	5.Fl/Stair	8.
3.3/4 Fin	6.	9.None
Insulation	**1 Full**	
1.Full	4.Minimal	7.
2.Heavy	5.Partial	8.
3.Capped	6.	9.None
Unfinished %	**0%**	
Grade & Factor	**2 Fair 100%**	
1.E Grade	4.B Grade	7.AAA Grad
2.D Grade	5.A Grade	8.M&S
3.C Grade	6.AA Grade	9.Same
SQFT (Footprint)	**896**	
Condition	**5 Above Average**	
1.Poor	4.Avg	7.V G
2.Fair	5.Avg+	8.Exc
3.Avg-	6.Good	9.Same
Phys. % Good	**0%**	
Funct. % Good	**100%**	
Functional Code	**9 None**	
1.Incomp	4.Delap	7.No Power
2.O-Built	5.Bsmt	8.LongTerm
3.Damage	6.Common	9.None
Econ. % Good	**100%**	
Economic Code	**None**	
0.None	3.No Power	9.None
1.Location	4.Generate	8.
2.Encroach	5.Multi-Fa	9.
Entrance Code	**5 Estimated**	
1.Interior	4.Vacant	7.
2.Refusal	5.Estimate	8.
3.Informed	6.Existing	9.
Information Code	**5 Estimate**	
1.Owner	4.Agent	7.Vacant
2.Relative	5.Estimate	8.
3.Tenant	6.Other	9.

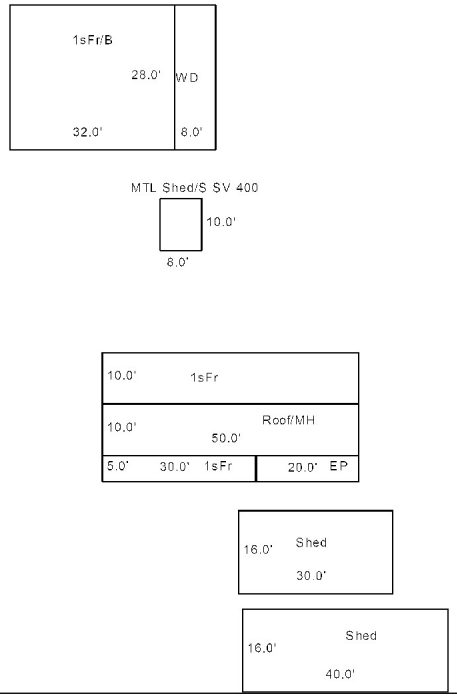

Date Inspected 10/08/2018

Additions, Outbuildings & Improvements

Type	Year	Units	Grade	Cond	Phys.	Funct.	Sound Value
68 Wood Deck/s	0	224	0 0	0	0 %	0 %	
24 Frame Shed	0				%	%	400
996 10 MFG UNIT	1956	10x50	2 100	2	0 %	75 %	
1 One Story Frame	0	500	0 0	0	0 %	0 %	
100 Roof Over MH	0	500	0 0	0	0 %	0 %	
1 One Story Frame	0	150	0 0	0	0 %	0 %	
22 Encl Frame	0	100	0 0	0	0 %	0 %	
24 Frame Shed	0	480	2 100	2	0 %	75 %	
24 Frame Shed	0	640	2 100	2	0 %	100 %	
					%	%	

1.One Story Fram
2.Two Story Fram
3.Three Story Fr
4.1 & 1/2 Story
5.1 & 3/4 Story
6.2 & 1/2 Story
21.Open Frame Por
22.Encl Frame Por
23.Frame Garage
24.Frame Shed
25.Frame Bay Wind
26.1SFr Overhang
27.Unfin Basement
28.Unfinished Att
29.Finished Attic